A Novel Model-Based Predictive Direct Power Control of Doubly-Fed Induction Generator

Alireza Nazari and Hossein Heydari, *Member, IACSIT*

***Abstract*—This paper proposes a novel model-based predictive controller for direct power control of doubly fed induction generator (DFIG). In this paper, a control law based-on the state-space model is described to compensate and regulate the differences between the output active and reactive power of stator of DFIG that is in interaction with the network. The instantaneous errors of active and reactive power of DFIG is eliminated with the consideration of the fact that no extra current control loop is needed and also no synchronous transformation is being held. Moreover, constant switching frequency is achieved and the transient response of the controller system is improved. Simulation results on a 2 MW-DFIG are provided using Matlab/Simulink to prove these claims.**

***Index Terms*—Doubly fed induction generator (DFIG), Direct Power Control (DPC), Model-based predictive control, Transient performance, Constant switching frequency.**

I. Introduction

Compared with fixed speed induction generator used in wind power generation system, doubly-fed induction generator (DFIG) offers a number of merits such as maximum wind- energy capturing, four-quadrant active and reactive power regulation, low converter cost and reduced power losses, all of which make DFIG become the most popular solution for wind-energy utilization. A schematic of a DFIG-based wind energy generation system is shown in Fig.1.

Control of DFIG wind turbine systems is rudimentarily based on either stator flux-oriented [1], [2] or stator-voltage-oriented vector control [3], [4]. This method decouples the rotor current into active and reactive power components. Control of the active and reactive powers is achieved with a rotor current controller. One main drawback of this system is that its performance depends highly on accurate machine parameters such as stator, rotor resistances, and inductances.

The next generation of power control methods is direct torque control (DTC) [5], [6]. DTC degrades the use of machine parameters and reduces the complexity of vector control algorithms. The DTC method directly controls machine torque and flux by selecting voltage vectors from a look-up-table using the stator flux and torque information.

One problem with the basic DTC scheme is that its performance deteriorates during starting and low-speed operations.

Based on the principles of DTC strategy, direct power control (DPC) was developed for three-phase pulse width modulation (PWM) rectifiers [7]–[9]. Converter switching states were selected from an optimal switching table based on instantaneous errors of active and reactive powers and the angular position of converter terminal voltage vector [7],[8], or virtual flux that is the integration of the converter output voltage[9]. More recently, DPC control of DFIG-based wind turbine systems has been proposed.

Based on the principles of DTC strategy, direct power control (DPC) was developed for three-phase pulse width modulation (PWM) rectifiers [10]–[12]. Converter switching states were selected from an optimal switching table based on instantaneous errors of active and reactive powers and the angular position of converter terminal voltage vector [10],[11], or virtual flux that is the integration of the converter output voltage [12]. More recently, DPC control of DFIG-based wind turbine systems has been proposed [13], [14]. In [13], the control system was based on the estimated rotor flux. Switching vectors were selected from the optimal switching table using the estimated rotor flux position, and the errors of the rotor flux and the active power/torque. The rotor flux reference was calculated using the reactive power/ power factor reference. Since the rotor supply frequency, which equals the DFIG slip frequency, can become very low, rotor flux estimation is significantly affected by the machine parameter variations. In [14], a DPC strategy based on the estimated stator flux was proposed. Since the stator (network) voltage is relatively harmonic-free with fixed frequency, a DFIG's estimated stator flux accuracy can be guaranteed. Switching vectors were selected from the optimal switching table using the estimated stator flux position, and the errors of the active power and reactive powers. Thus, the control system is very simple, and the machine parameters' impact on system performance was found to be negligible. However a conventional DPC has switching frequency that varies significantly with active and reactive power variations, machine operating speed(rotor slip), and the power controllers' hysteresis bandwidth [13], [14]. In [15], the method predicts the DFIG's stator active and reactive power variations within a fixed sampling period, which is used to directly calculate the required rotor voltage to eliminate the power errors at the end of the following sampling period. This method directly controls the active power and the reactive power of the DFIM at constant switching frequency. Also, it has some privileges to the other DPCs; such as improvement of transient performance, negligible parameter effects on system performance and its good dynamic response.

In this paper, a novel model-based predictive direct power control (MBPDPC) is proposed to achieve a constant switch frequency and to improve system transient behavior. The paper is organized as follows. Section II depicts a

Manuscript received June 15, 2012; revised July 24, 2012.

Alireza Nazari is with High Voltage Lab.-Iran Uni of Sci and Tech.-University St.-Hengam Avenue.-Resalat Square, Iran (e-mail:nazari@elec.iust.ac.ir)

detailed model of DFIG. Section III gives a detailed view of proposed direct power control of DFIG. Simulation results for a 2MW DFIG generation system are presented in section IV. At last, conclusions are revealed in section V.

II. DFIG Detailed Model and DPC

A. DFIG Model

The mathematical model of the DFIG used in this paper is presented here using the d-q synchronous reference frame. The equations for the stator and rotor windings can be written as [16]:

$$\begin{cases} u_{sd} = R_S i_{sd} + \dfrac{d}{dt}\psi_{sd} - w_1\psi_{sq} \\ u_{sq} = R_S i_{sq} + \dfrac{d}{dt}\psi_{sq} + w_1\psi_{sd} \end{cases} \quad (1)$$

$$\begin{cases} u_{rd} = R_r i_{sd} + \dfrac{d}{dt}\psi_{rd} - w_s\psi_{rq} \\ u_{rq} = R_r i_{rq} + \dfrac{d}{dt}\psi_{rq} + w_r\psi_{rd} \end{cases} \quad (2)$$

The *d-q* synchronous reference frame equations of the stator flux and rotor may be written also as:

$$\begin{cases} \psi_{sd} = L_S i_{sd} + L_m i_{rd} \\ \psi_{sq} = L_s i_{sq} + L_m i_{rq} \end{cases} \quad (3)$$

$$\begin{cases} \psi_{rd} = L_m i_{sd} + L_r i_{rd} \\ \psi_{rq} = L_m i_{sq} + L_r i_{rq} \end{cases} \quad (4)$$

By substituting (3) and (4) in (1) and (2) it is possible to obtain a state space model based on the current components.

The electromagnetic torque, the active and reactive power equations at the stator windings may be written as:

$$T_e = \frac{3}{2} p(\lambda_{qs} i_{ds} - \lambda_{ds} i_{qs}) \quad (5)$$

$$P_s = \frac{3}{2}(v_{sd} i_{sd} + v_{sq} i_{sq}) \quad (6)$$

$$Q_s = \frac{3}{2}(v_{sq} i_{sd} - v_{sd} i_{sq}) \quad (7)$$

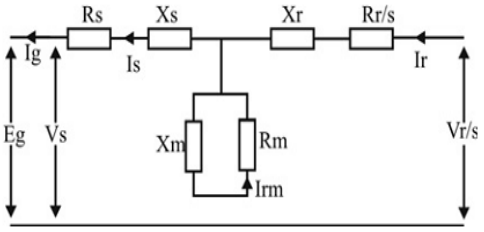

Fig. 1. Equivalent circuit of DFIG

The system dynamics, neglecting the friction loss, is given by (8):

$$J\frac{dw_r}{dt} + Bw_r = T_{mec} - T_e \quad (8)$$

The fifth order model of the DFIG is consisting of equations (1), (2) and (8).

B. DFIG's Active and Reactive Power Flow

As shown below by substituting (1) and (2) into (3) results in the stator active power input and reactive power output as

$$\begin{aligned} P_s &= \frac{3}{2}(\dot{\psi}_s^r + jw_r\psi_s^r).I_s^r \\ &= \frac{3}{2}[j(w_1 - w_r)\psi_s^r + jw_r\psi_s^r].(\frac{\psi_s^r}{\sigma L_s} - \frac{L_m\psi_r^r}{\sigma L_s L_r}) \\ &= \frac{3}{2}[jw_r\psi_s^r].(\frac{\psi_s^r}{\sigma L_s} - \frac{L_m\psi_r^r}{\sigma L_s L_r}) \\ &= -\frac{3}{2}[jw_r\psi_s^r.\frac{L_m\psi_r^r}{\sigma L_s L_r}] \end{aligned} \quad (9)$$

(10)

The above equation can be expressed as

$$P_s = -\frac{3}{2}\frac{L_m}{\sigma L_s L_r} w_1 \left|\psi_s^r\right|\left|\psi_r^r\right| \sin\theta \quad (11)$$

where $\theta = \theta r - \theta s$ is the angle between the rotor and stator flux linkage vectors.

Similarly, substituting (1) and (2) into (4) results in the DFIG output reactive power as

$$\begin{aligned} Q_s &= -\frac{3}{2}(\dot{\psi}_s^r + jw_r\psi_s^r)\times I_s^r \\ &= -\frac{3}{2}[j(w_1 - w_r)\psi_s^r + jw_r\psi_s^r]\times(\frac{\psi_s^r}{\sigma L_s} - \frac{L_m\psi_r^r}{\sigma L_s L_r}) \\ &= -\frac{3}{2}(jw_1\psi_s^r)\times(\frac{\psi_s^r}{\sigma L_s} - \frac{L_m\psi_r^r}{\sigma L_s L_r}) \\ &= \frac{3}{2}\frac{w_1}{\sigma L_s}[(j\psi_s^r)\times(\frac{L_m}{L_r}\psi_r^r - \psi_s^r)] \end{aligned} \quad (12)$$

(13)

The above equation can be expressed as

$$Q_s = \frac{3}{2}\frac{w_1}{\sigma L_s}\left|\psi_s^r\right|(\frac{L_m}{L_r}\left|\psi_r^r\right|\cos\theta - \left|\psi_s^r\right|) \quad (14)$$

III. Proposed Model-Based Predictive Direct Power Control

The principle of the proposed MBPDPC method involves both to directly calculate required rotor voltage over a fixed sampling period and to design a model to choose effectively from these voltage vectors in order to approach the active and reactive power references limit.

The model based predictive control consists of two main elements: the model of the system to be controlled and optimizer which determines optimal future control actions. The model is used to predict the future behavior of the system with the control law obtained by optimizing a cost

function that considers the effort necessary for control and the difference between the output predicted and the actual reference value.

The receding-horizon principle i_{ds} used so that the first element of the optimal sequence is applied. In any given plant, new measurements are made for each succeeding sample, and the procedures are then repeated.

There are various MBPC techniques for output prediction by using the state space model or the transfer function of the system [18], [19]. In this paper, the output prediction is derived from the transfer function model and the steps are as follows:

1) Write out the difference equation (3.14) for the next n_y sampling instants.

$$\begin{aligned} &y_{k+1} + A_1 y_k + ... + A_{n+1} y_{k-n} = b_1 \Delta u_k + b_2 \Delta u_{k-1} + ... + b_n \Delta u_{k-n+1} \\ &y_{k+2} + A_1 y_{k+1} + ... + A_{n+1} y_{k-n+1} = b_1 \Delta u_{k+1} + b_2 \Delta u_k + ... + b_n \Delta u_{k-n+2} \\ &. \\ &. \\ &. \\ &y_{k+n_y} + ... + A_{n+1} y_{k-n+1+n_y} = b_1 \Delta u_{k+n_y-1} + ... + b_n \Delta u_{k+n_y-n} \end{aligned} \quad (15)$$

2) These can be placed in the following compact matrix/vector form:

$$\underbrace{\begin{bmatrix} 1 & 0 & \cdots & 0 \\ A_1 & 1 & \cdots & 0 \\ A_2 & A_1 & \cdots & 0 \\ \vdots & \vdots & \vdots & \vdots \end{bmatrix}}_{C_A} \underbrace{\begin{bmatrix} y_{k+1} \\ y_{k+2} \\ \vdots \\ y_{k+n_y} \end{bmatrix}}_{\underrightarrow{y}_k} + \underbrace{\begin{bmatrix} A_1 & A_2 & \cdots & A_{n+1} \\ A_2 & A_3 & \cdots & 0 \\ A_3 & A_4 & \cdots & 0 \\ \vdots & \vdots & \vdots & \vdots \end{bmatrix}}_{H_A} \underbrace{\begin{bmatrix} y_k \\ y_{k-1} \\ \vdots \\ y_{k-n} \end{bmatrix}}_{\underleftarrow{y}_k}$$

$$= \underbrace{\begin{bmatrix} b_1 & 0 & \cdots & 0 \\ b_2 & b_1 & \cdots & 0 \\ b_3 & b_2 & \cdots & 0 \\ \vdots & \vdots & \vdots & \vdots \end{bmatrix}}_{C_{zb}} \underbrace{\begin{bmatrix} \Delta u_k \\ \Delta u_{k+1} \\ \vdots \\ \Delta u_{k+n_y-1} \end{bmatrix}}_{\underrightarrow{\Delta u}_{k-1}} + \underbrace{\begin{bmatrix} b_2 & b_3 & \cdots & b_n \\ b_3 & b_4 & \cdots & 0 \\ b_4 & b_5 & \cdots & 0 \\ \vdots & \vdots & \vdots & \vdots \end{bmatrix}}_{H_{zb}} \underbrace{\begin{bmatrix} \Delta u_{k-1} \\ \Delta u_{k-2} \\ \vdots \\ \Delta u_{k-n+1} \end{bmatrix}}_{\underleftarrow{\Delta u}_{k-1}} \quad (16)$$

3) Output predictions, with T = 1, are given by:

$$\underrightarrow{y}_k = C_A^{-1}[C_{zb}\underrightarrow{\Delta u}_{k-1} + H_{zb}\underrightarrow{\Delta u}_{k-1} - H_A \underrightarrow{y}_k] \quad (17)$$

For convenience one may wish to present it as:

$$\underrightarrow{y}_k = H\underrightarrow{\Delta u}_{k-1} + P\underrightarrow{\Delta u}_{k-1} + Q\underrightarrow{\Delta u}_{k-1} \quad (18)$$

4) Define the vector formulation of the cost[18]:

$$J = \left\| \underrightarrow{r} - \underrightarrow{y} \right\|_2^2 + \lambda \left\| \Delta \underrightarrow{u} \right\|_2^2 \quad (19)$$

5) Substitute y from eqn.(3.25) into (4.19):

$$J = \left\| \underrightarrow{r} - H\Delta \underrightarrow{u} + P\Delta \underrightarrow{u} + Q\Delta \underrightarrow{u} \right\|_2^2 + \lambda \left\| \Delta \underrightarrow{u} \right\|_2^2 \quad (20)$$

Note that H is tall and thin to take account of the fact that $\Delta u_k + i = 0,\ i \geqslant n_u$.

6) Contains terms that do not depend upon Δu and hence can be ignored.

$$\min_{\Delta \underrightarrow{u}} J = \Delta \underrightarrow{u}^T (H^T H + \lambda I)\Delta \underrightarrow{u} + 2\Delta \underrightarrow{u}^T H^T [P\Delta \underrightarrow{u} + Q\underrightarrow{y} - \underrightarrow{r}] + k \quad (21)$$

7) Note that the performance index is quadratic (and always positive) and hence has a unique minimum which therefore can be located by setting the first derivative to zero:

$$\begin{aligned} &\frac{dJ}{d\Delta \underrightarrow{u}} = 2(H^T H + \lambda I)\Delta \underrightarrow{u} + 2H^T [P\Delta \underrightarrow{u} + Q\underrightarrow{y} - \underrightarrow{r}] \\ &\Downarrow \\ &\frac{dJ}{d\Delta \underrightarrow{u}} = 0 \Rightarrow \Delta \underrightarrow{u} = (H^T H + \lambda I)^{-1} H^T [\underrightarrow{r} - P\underrightarrow{y} - Q\Delta \underrightarrow{u}] \end{aligned} \quad (22)$$

8) The GPC control law is defined by the first element of Δu

$$\Delta u_k = e_1^T \Delta \underrightarrow{u} \quad (23)$$

$$e_1^T = [\mathrm{I}, 0, 0 \ldots 0]$$

$$\Delta u_k = e_1^T (H^T H + \lambda I)^{-1} H^T [\underrightarrow{r} - P\underrightarrow{y} - Q\Delta \underrightarrow{u}] \quad (24)$$

To sum up, the computation (4.24) is recalculated at each sampling instant and therefore the control law is:

$$\Delta u_k = P_r \underrightarrow{r} - N_k \underrightarrow{y} - D_k \Delta \underrightarrow{u} \quad (25)$$

where

$$\begin{aligned} P_r &= e_1^T (H^T H + \lambda I)^{-1} H^T \\ N_k &= e_1^T (H^T H + \lambda I)^{-1} H^T P \\ D_k &= e_1^T (H^T H + \lambda I)^{-1} H^T Q \end{aligned} \quad (26)$$

The diagram of the MBPDPC applied to direct power control is shown in Figure 2. MBPDPC algorithm generates the rotor voltages that allow the active and reactive power convergence to their respective commanded values. The converter that is connected to the grid control the voltage of the DC link. The desired rotor voltage in the synchronous reference frame generates switching signals for the rotor side using PWM modulation.

IV. Simulation Results

Simulation of the proposed control strategy for a DFIG-based generation system was carried out using Matlab/Simulink and Fig.3 shows the schematic diagram of the system implemented. The DFIG is rated at 2MW and its parameters are given in the Appendix B. The nominal dc link voltage is set at 1200V and the dc capacitance is 16000 μF. A simple RC filter is connected to the stator to absorb the switching harmonics generated by the converters. The rotor side converter is used to control the DFIG stator active and reactive power based on the proposed DPC strategy. The main objective of the grid side converter is to maintain a constant dc link voltage and it is controlled using a similar method as the dc voltage controller in a VSC Transmission system [20] and the shunt converter in an UPFC [21].

First, the generator waveforms of stator voltages, stator current are shown in Fig.4 (a), (b), gained. It show us the robustness and effectiveness of the proposed control method which do not affect the ultimate and the trajectory of stator current and voltages spectra during both steady state and transient performances. Moreover, in Fig4(c), the DC link voltage of the capacitor which is stated constant is shown.

As seen in this plot, it considers the constant 1200 V and the controller do its job as well.

Comparing Fig.5 (A) with Fig.5 (B), there is hardly any difference and even the improvement is seen, the system maintains superb performance under both steady state and transient conditions. This is further proved in Fig.6, which compares the reactive power waveforms of both the conventional DPC and the proposed MBPDPC. All in all, both the quality of the steady-state behavior and the transient response capacities are achieved with the predictive DPC strategy compared to a conventional DPC technique.

To further compare the performance of the proposed MBPDPC with the conventional DPC, Figs.7 , give the stator and rotor current harmonic spectra with Ps =20 kW and Qs =15 kVar for different control strategies. Obviously, conventional DPC results in higher stator current harmonic distortion than the proposed one. Besides, the conventional DPC results in broad band harmonic spectra, whereas MBPDPC produces similar deterministic harmonics as VC with dominant harmonics around the 1 kHz switching frequency and multiples thereof. Thus, it can be concluded from the results that the proposed DPC proves enhanced transient performance similar to the DPC, and meanwhile keeps the steady-state harmonic spectra at the same level as the classic VC due to the use of model-based technique as shown in Fig.7.

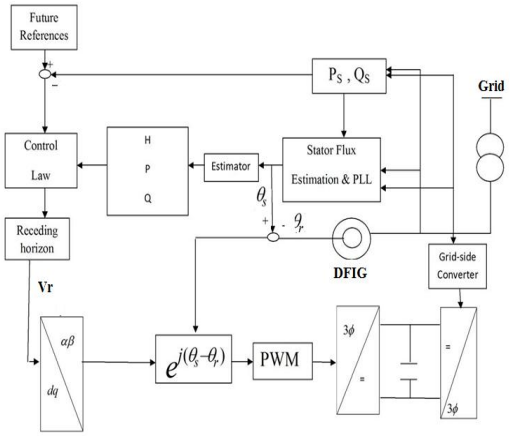

Fig. 2. A Schematic diagram of MBPDPC

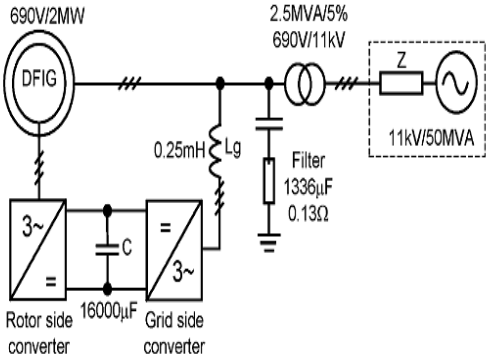

Fig. 3. Schematic diagram of the simulated system

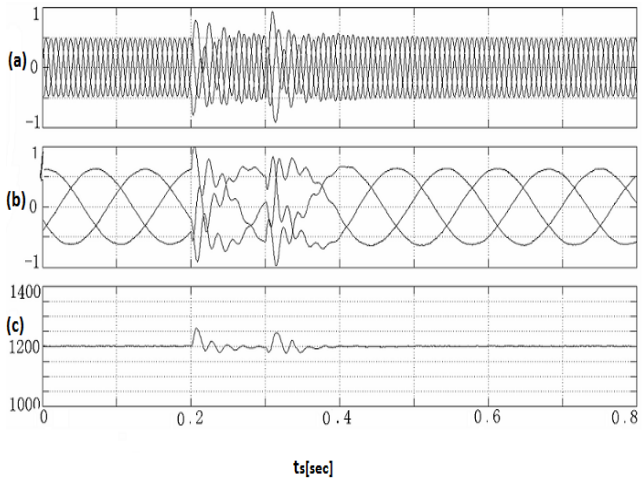

Fig. 4. The generator waveforms: (a) stator voltages, (b) stator currents, (c) DC link voltage

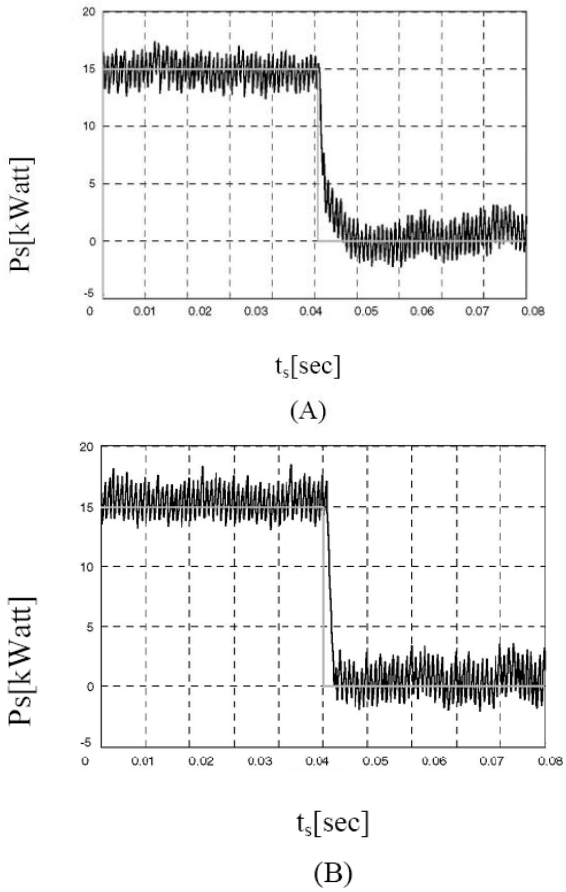

Fig. 5. Comparison of active power between the MBPDPC and conventional DPC during small-source harmonic distortion (5th:0.5%, 7th:0.4%). (A) Common DPC, (B) proposed MBPDPC.

V. Conclusions

This paper has proposed a new DPC for grid connected DFIG systems based on model-based predictive control approach. Simulation results on a 2-MW grid-connected DFIG system have been provided and compared with conventional DPC. The main features of the proposed model-based predictive DPC strategy are as follows.

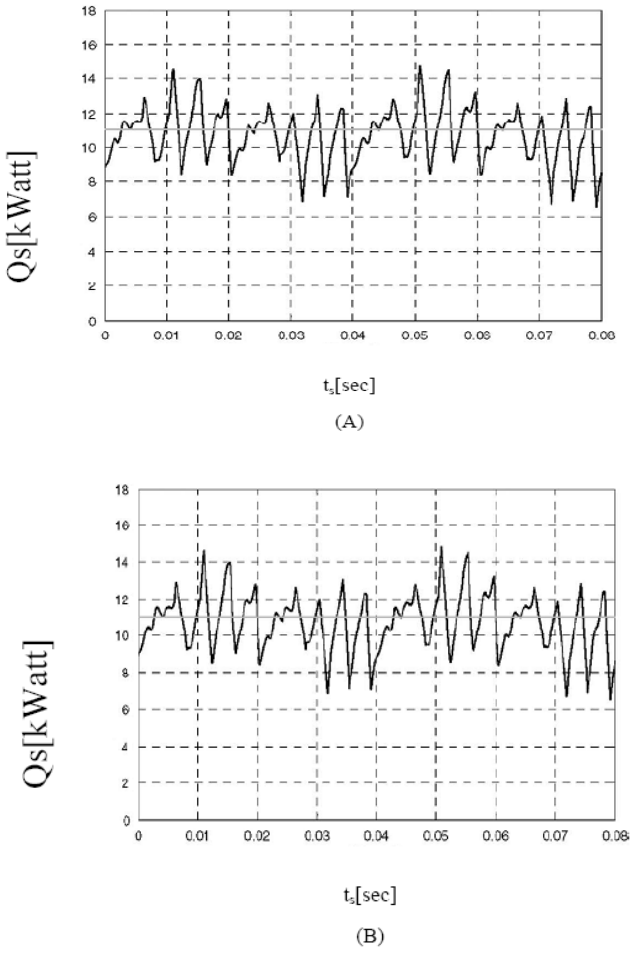

Fig. 6. Comparison of reactive power between the MBPDPC and conventional DPC during small-source harmonic distortion (5th:0.5%, 7th:0.4%). (A) Common DPC, (B) proposed MBPDPC

TABLE I: PARAMETERS OF THE SIMULATED DFIG

Rated power	2 MW
Stator voltage	690V
DC link voltage	1200V
Stator/rotor turns ratio	0.38
Lumped inertia constant	0.2s
Number of pole pairs	2
R_s	0.0108pu
R_r	0.0121pu (referred to the stator)
L_m	3.362pu
L_{ls}	0.102pu
L_{lr}	0.11pu (referred to the stator)

1) No synchronous coordinate transformations and angular information of grid voltage or stator flux are required.

2) Enhanced transient performance similar to the conventional DPC is obtained.

3) Steady-state stator and rotor current harmonic spectra are kept at the same level as the classic VC strategy due to the use of model-based predictive control technique

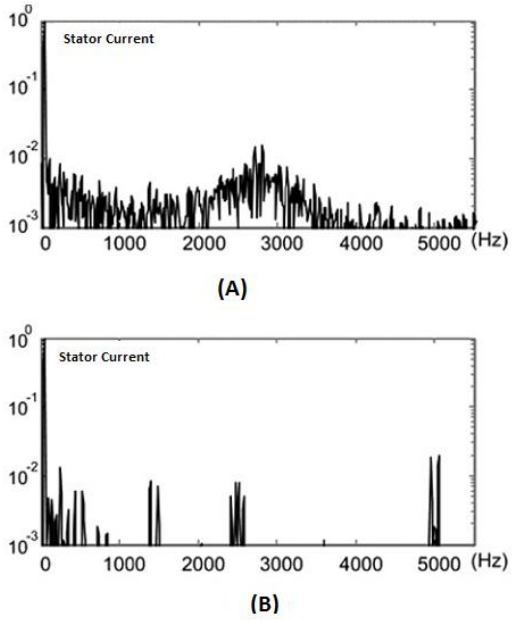

Fig. 7. Stator current spectra, Ps = −1.5 kW, Qs = −1.0 kvar. A) RF-DPC B) MPDPC.

REFERENCES

[1] W. Leonhard, "Control of Electrical Drives. London," U.K. Springer, 2001.

[2] R. Pena, J. C. Clare, and G. M. Asher, "Doubly fed induction generator using back-to-back PWM converters and its application to variable-speed wind-energy generation," *Inst. Elect. Eng. Proc. Elect*, Power Appl, vol. 143, no. 3, pp. 231–241, 1996.

[3] H. Akagi and H. Sato, "Control and performance of a doubly-fed induction machine intended for a flywheel energy storage system," *IEEE Trans. Power Electron*, vol.17, no.1, pp.109–116, Jan.2002.

[4] R. W. D. Doncker, S. Muller, and M. Deicke, "Doubly fed induction generator systems for wind turbines," *IEEE Ind. Appl. Mag*, vol. 8, no. 3, pp. 26–33, May/Jun.2002.

[5] I. Takahashi and T.Noguchi, "A new quick-response and high-efficiency control strategy of an induction motor," *Inst. Elect. Eng. Trans. Ind. Appl*, vol. 22, no. 5, pp. 820–827, 1986.

[6] M. Depenbrock, "Direct self-control (DSC) of inverter-fed induction machine," *IEEE Trans. Power Electron*, vol. 3, no. 4, pp. 420–429, 1988.

[7] T. Noguchi, H. Tomiki, S. Kondo, and I. Takahashi, "Direct power control of PWM converter without power-source voltage sensors," *IEEE Trans. Ind.Appl*, vol. 34, no. 3, pp. 473–479, 1998.

[8] G. Escobar, A. M. Stankovic, J. M. Carrasco, E. Galvan, and R. Ortega, "Analysis and design of direct power control (DPC) for a three phase synchronous rectifier via output regulation subspaces," *IEEE Trans. Power Electron*, vol.18, no. 3, pp. 823–830, May 2003.

[9] M. Malinowski, M. P. Kazmierkowski, S. Hansen, F. Blaabjerg, and G. D. Marques, "Virtual-flux-based direct power control of three-phase PWM rectifiers," *IEEE Trans. Ind. Appl*, vol. 37, no. 4, pp.1019–1027, 2001.

[10] T. Noguchi, H. Tomiki, S. Kondo, and I. Takahashi, "Direct power control of PWM converter without power-source voltage sensors," *IEEE Trans. Ind. Appl*, vol. 34, no. 3, pp. 473–479, May/Jun.1998.

[11] G. Escobar, A. M. Stankovic, J. M. Carrasco, E. Galvan, and R. Ortega, "Analysis and design of direct power control (DPC) for a three phase synchronous rectifier via output regulation subspaces," *IEEE Trans. Power Electron*, vol. 18, no. 3, pp. 823–830, May2003.

[12] M. Malinowski, M. P. Kazmierkowski, S. Hansen, F. Blaabjerg, and G. D. Marques," Virtual-flux-based direct power control of three-phase PWM rectifiers," *IEEE Trans. Ind. Appl*, vol. 37, no. 4, pp. 1019–1027, Jul./ Aug. 2001.

[13] K. P. Gokhale, D. W. Karraker, and S. J. Heikkila, "Controller for a wound rotor slip ring induction machine," *U. S. Patent 6448735 B1*, Sep.2002.

[14] L. Xu and P. Cart wright, "Direct active and reactive power control of DFIG for wind energy generation," *IEEE Trans. Energy Convers*, vol. 21, no. 3, pp. 750–758, Sep.2006.
[15] H. Akagi, Y. Kanazawa, and A. Nabae, "Generalized theory of the instantaneous reactive power in three-phase circuits," in *Proc. Int. Power Electron. Conf*, 1983, pp. 1375–1386.
[16] T. Ackermann, "Wind Power in Power Systems," New York, UK: Wiley, 2005.
[17] H. S. KO, "Supervisory voltage control scheme for grid connected wind farms," Ph. D. dissertation, *Dept Elect. Comput. Eng*, Univ. British Columbia, Vancouver, BC, Canada, 2006.
[18] J. A. Rossiter, Model based predictive control- A Practical Approach. CRC Press, 2003.
[19] E. S. De Santana, E. Bim, and W. C. do Amaral, "Apredictive algorithm for controlling speed and rotor flux of induction motor," *IEEE Transaction on Industrial Electronics*, vol. 55, no. 12, pp. 4398-4407, December 2008.
[20] J. L. Thomas, S. Poullain, and A. Benchaib, "Analysis of a robust DC bus voltage control system for a VSC- transmission scheme," in *Proc. IEE 7th Int. Conf. AC-DC Power Transmission*, Nov. 28–30, 2001, pp. 119–124.
[21] L. Xuand and V. G. Agelidis, "Flying capacity or multi level PWM converter based UPFC," in *Proc. Inst. Elect. Eng. B*, vol. 149, no. 4, pp. 304–310, Jul. 2002.