Novel Binary Document Image Watermarking Exploiting the Features of Double Domains

Xinshan Zhu, *Member, IEEE*, Lei Wen, and Yanming Chen

***Abstract*—This paper presents a double domain watermarking scheme for binary document image. The watermark patterns are generated as the discrete cosine transform (DCT) domain signals, and then perceptually shaped through weighting its components in the spatial domain with the perceptual masks. The perceptual masks are obtained by applying a psychovisual model in the spatial domain and simultaneously considering the impact of the distance between two flappable pixels. Watermark extraction can be operated by applying a correlation based detector in either of the two domains. The approach exploits the information of the two domains for embedding, but avoids transforming the original binary image directly, which does not cause unacceptable loss of watermark. The experimental results show that the presented approach performs very well both in invisibility and robustness.**

***Index Terms*—Image watermarking, double domains, binary document image, robustness**

I. Introduction

With the rapid development of electronic publishing industry, more and more documents are stored and transmitted in binary image format. Since digital document is easy to copy and edit, the copyright protection becomes an urgent issue. A number of digital watermarking techniques have been proposed for this purpose [1].

Huang *et al.* [2] proposed to embed data by adjusting inter-word distance in each line. These slight changes are invisible but easily detected by computer. The shape features of texts are used for watermark embedding in [3], [4]. The watermark capacity is high enough, but the knowledge of features must be available to detector. The text watermarking applies natural language processing technologies in [5]. One drawback of it is that the original meaning might be changed due to watermark embedding. In [6], Wu *et al.* presented a quantization based watermarking approach using a perceptual model. The method is performed in the spatial domain, thus its robustness is not satisfied. The authors [7] attempted to design DCT based watermarking for binary images. They show that the watermark is completely destroyed by transform and binarization operations. Lu *et al.* [8] presented to hide data into the DC components of DCT for binary images. However, this method is equivalent to add constant values to all pixels in the spatial domain. In [9], the watermark is embedded into the morphological transform domain of binary images. Although this approach solves the problem mentioned in [7], it is especially designed for authentication.

The development of robust watermarking for binary document image is of interest in this paper. The main contribution is to propose the double domain watermarking (DDW). The remainder of this paper is organized as follows. Section 2 describes the embedding procedure of DDW. We explain how the watermark signal is constructed and embedded into the binary image. Next, Section 3 addresses the computation of the perceptual masks. Section 4 presents the extracting procedure of DDW. And Section 5 is dedicated to analyze how the shaping operation in DDW affects watermark detection. A series of tests are done to evaluate the presented approach in Section 6. Finally, Section 7 concludes the paper.

Notation: Throughout the text, boldface lower-case letters denote column vectors, e.g. $\boldsymbol{x}$, whereas boldface capital letters are reserved for two-dimensional matrices, e.g. $\boldsymbol{X}$. The DCT coefficient matrix of a matrix $\boldsymbol{X}$ is denoted by $\widetilde{\boldsymbol{X}}$. The index i and j are used to distinguish between different elements of a matrix $\boldsymbol{X}$ (or vector $\boldsymbol{x}$), e.g. $X_{i,j}$ (or x_j). For two matrices $\boldsymbol{X}$ and $\boldsymbol{Y}$, $< \boldsymbol{X}, \boldsymbol{Y} >$ represents their inner product and $\boldsymbol{X} \bullet \boldsymbol{Y}$ indicates that each element of $\boldsymbol{X}$ is multiplied by the corresponding element of $\boldsymbol{Y}$. Last, $\| \boldsymbol{X} \|$ refers to Euclidean (i.e., ℓ_2) norm of a matrix $\boldsymbol{X}$.

II. Watermark Embedding

The DDW method is designed based on spread spectrum (SS) modulation, taking the human visual system (HVS) into account. The watermark patterns are considered as the DCT domain signals and inserted into the host document image after performing inverse DCT (IDCT).

A. Embedding Procedure

Let $\boldsymbol{X}$ denote a host document image of size $N_1 \times N_2$ and m the watermark message. The embedding procedure of DDW

Manuscript received May 3, 2011; revised July 22, 2011. This work was supported by the National Natural Science Foundation of China under Grant No. 60803122, 61103018, by the Natural Science Foundation of Jiangsu Province under Grant No. BK2011442, by the Innovative Foundation of Yangzhou University under Grant No. 2011CXJ023, by the Opening Project of State Key Laboratory of Digital Publishing Technology, and by the Opening Project of State Key Laboratory of Software Development Environment under Grant No. SKLSDE-2011KF-08.

Xinshan Zhu is with the State Key Laboratory of Digital Publishing Technology, Chengfu Road 298, Beijing, 100871 China and the Information Engineering College of Yangzhou University, Jiangsu, 225000 China (e-mail: xszhu_hm@hotmail.com).

Lei Wen is with the Information Engineering College of Yangzhou University, Jiangsu, 225000 China (e-mail: maxwen@163.com).

Yanming Chen was with the Information Engineering College of Yangzhou University, Jiangsu, 225000 China. He is now with the Recruitment Information Department, Office of Yangzhou Human Resources Market Management, Jiangsu, 225000 China (e-mail: cnj-52633@yeah.net).

is illustrated in Fig. 1, and described in detail as follows.

Step 1: The watermark message m is mapped by an encoder into an codeword vector $\boldsymbol{b}$ with P binary antipodal components, i.e., $b_j \in \{-1, 1\}$, $j = 1, \cdots, P$. The performance of watermarking can be effectively improved through using error correction coding in this step.

Step 2: A set of P reference patterns $\boldsymbol{w}_{r1}, \cdots, \boldsymbol{w}_{rP}$ are pseudorandomly generated according to the given seed K. In particular, they are independently drawn from the standard Gaussian distribution $\mathcal{N}(0, 1)$. Each pattern corresponds to one bit information to be hidden. Without loss of generality, all patterns are of the same length L.

Step 3: By filling with zero, each reference pattern is extended to form a matrix of size $N_1 \times N_2$, yielding P matrixes $\widetilde{\boldsymbol{W}}_1, \cdots, \widetilde{\boldsymbol{W}}_P$. They are linearly combined with $\boldsymbol{b}$ into a single watermark signal $\widetilde{\boldsymbol{W}}$, i.e., $\widetilde{\boldsymbol{W}} = \sum_{j=1}^{P} b_j \widetilde{\boldsymbol{W}}_j$. Let $\mathcal{S}_j$ denote the set of index pairs where the entries of $\widetilde{\boldsymbol{W}}_j$ take values from $\boldsymbol{w}_{rj}$. Since $\widetilde{\boldsymbol{W}}$ is considered as the DCT domain signal to be embedded, the embedding positions $\mathcal{S}_1, \cdots, \mathcal{S}_P$ should be chosen in the medium frequency region to seek the good tradeoff between robustness and imperceptibility. Additionally, in order not to introduce initial inter symbol interference, any two sets among $\mathcal{S}_1, \cdots, \mathcal{S}_P$ are non overlapping, $\mathcal{S}_i \cap \mathcal{S}_j = \emptyset$, $i \neq j$.

Step 4: An $N_1 \times N_2$ IDCT is carried out on $\widetilde{\boldsymbol{W}}$ to obtain the so-called spatial domain watermark signal $\boldsymbol{W}$. The inverse DCT operation packs the energy of input data into the low frequency region, which possibly causes the serious quality degradation in the top left corner of the watermarked image. The problem can be solved by constructing the watermark signal $\widetilde{\boldsymbol{W}}$ with a symmetric distribution. That is one reason why we use the standard Gaussian distributed reference patterns.

Step 5: In order to embed into the image the maximum, but still unperceptible, the watermark signal $\boldsymbol{W}$ need be perceptually shaped applying the characteristics of HVS. In our watermarking scheme, the shaping operation is performed in the spatial domain as

$$\boldsymbol{W}_s = \boldsymbol{M} \cdot \boldsymbol{W} \tag{1}$$

where $\boldsymbol{M}$ denotes the perceptual mask and $\boldsymbol{W}_s$ is the shaped version of $\boldsymbol{W}$. The computation of the spatial mask $\boldsymbol{M}$ will be investigated in the next section.

Step 6: The shaped watermark $\boldsymbol{W}_s$ is embedded into the host image $\boldsymbol{X}$ using the additive modulation as

$$\boldsymbol{X}_w = \boldsymbol{X} + \alpha\, \boldsymbol{W}_s \tag{2}$$

where $\boldsymbol{X}_w$ denotes the watermarked signal, and α is the global gain factor to control the watermark strength.

Step 7: The watermarked signal $\boldsymbol{X}_w$ undergoes a binarization operation to produce the watermarked image $\boldsymbol{X}_b$ as

$$X_{b_{i,j}} = \begin{cases} 1, & X_{w_{i,j}} \geq \tau \\ 0, & \text{else} \end{cases} \quad 1 \leq i \leq N_1, 1 \leq j \leq N_2 \tag{3}$$

where the binarization threshold τ is set to 0. 5 in our method.

As we can see, three main factors are considered in the approach to obtain the satisfied performance: the watermark structure in Step 2 and Step 3, the embedding positions in Step 3, and the spatial HVS in Step 5. In addition, only one time inverse DCT is carried out during embedding, resulting in the reduced computational cost.

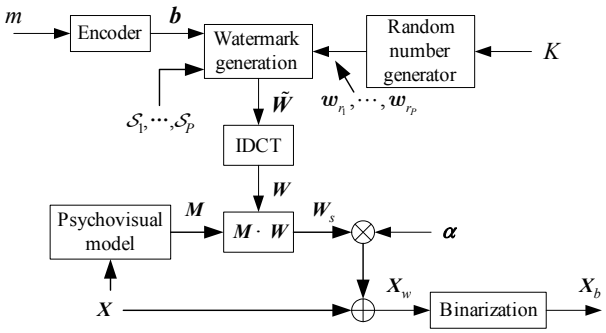

Fig. 1. The embedding procedure of DDW.

B. Embedding Strength

Now, let us explain how to determine the embedding strength α by the given distortion constraint. To evaluate the quality of the watermarked image, we introduce the signal-to-noise ratio (SNR), defined as $\xi(\boldsymbol{X}_b, \boldsymbol{X}) = \|\boldsymbol{X}\|^2 / \|\boldsymbol{X}_b - \boldsymbol{X}\|^2$. For binary document image, the image content is represented by dark pixels with value 0. Thus, the above definition is modified as

$$\xi(\boldsymbol{X}_b, \boldsymbol{X}) = \frac{\|1 - \boldsymbol{X}\|^2}{\|\boldsymbol{X}_b - \boldsymbol{X}\|^2} \tag{4}$$

Suppose that N_d and N_f are respectively the number of dark pixels in $\boldsymbol{X}$ and those flipped pixels from $\boldsymbol{X}$ to $\boldsymbol{X}_b$. The expression (4) reduces to $\xi(\boldsymbol{X}_b, \boldsymbol{X}) = N_d / N_f$. So the ratio N_d / N_f can serve as a quality metric for the binary image.

Given the distortion constraint $\xi(\boldsymbol{X}_b, \boldsymbol{X}) \geq \gamma$, in view of (2), the embedding strength α is approximately calculated as

$$\alpha = \sqrt{\frac{N_d}{\gamma \|\boldsymbol{W}_s\|^2}} \tag{5}$$

where γ denotes an acceptable level of embedding distortion. Considering the effect of binarization process, the obtained α by (5) is not the best. An optimal embedding strength α is given by a local search around the value given by (5).

There exists a main difference between the conventional watermarking and DDW. For the previous one, watermark embedding is performed in a single domain, either in the spatial domain or in a certain transform domain. However, for DDW, the watermark signal is constructed in the DCT

domain, and then perceptually shaped in the spatial domain. Obviously, by using the information from the two domains for embedding DDW can be expected to achieve better watermarking performance.

III. Perceptual Mask

Through the choice of the embedding strength, we can control the total number of the flipped pixels. However, how to determine the places of the flipped pixels affects the watermark performance largely. The perceptual mask plays an important role in solving this problem. To obtain the mask, it is necessary to use a psychovisual model in the spatial domain and simultaneously consider the proposed watermarking method.

Let us define the complete set of positions $\mathcal{C}=\{(i,j) \mid 1 \le i \le N_1, 1 \le j \le N_2\}$ and its two sub-sets $\Lambda_1=\{(i,j) \mid X_{i,j}=1\}$ and $\Lambda_2=\{(i,j) \mid W_{i,j} \ge 0\}$. For a pixel $X_{i,j}$ of the host document image, if the position (i, j) satisfies $(i, j) \in \Lambda_1 \cap \Lambda_2$, $X_{i,j}$ remains unchanged after applying the embedding procedure given previously, and thus, $M_{i,j}$ can be set to zero. That is, we can write $M_{i,j}=0$ for $(i,j) \in \Lambda_1 \cap \Lambda_2$. Similarly, we have $M_{i,j} = 0$ for $(i, j) \in \overline{\Lambda}_1 \cap \overline{\Lambda}_2$, where $\overline{\Lambda}_i$ denotes the complementary set of Λ_i.

In other cases, namely $(i, j) \in \overline{\Lambda}_1 \cap \Lambda_2 + \Lambda_1 \cap \overline{\Lambda}_2$, the pixel $X_{i,j}$ is possibly altered during the embedding procedure. At this time, the perceptual mask is obtained by using a psychovisual model. Since human visual perception of document images is different from that of natural images, the psychovisual models built for natural images, such as color and contrast, may not be well suited for document images [11]. Some attempts have been made to develop the model for the special application. One of the most important models was proposed by Wu *et al.* [6]. In this model, a flippability score between 0 and 1 is assigned to each pixel of a binary image. Flipping pixels with higher scores generally causes less visual artifacts than flipping a lower ones and zero indicates no flipping. The flippability scores are dynamically determined by observing the smoothness and connectivity of pixels. Using this model, we compute the score $T_{i,j}$ for each pixel $X_{i,j}$ satisfying $(i, j) \in \overline{\Lambda}_1 \cap \Lambda_2 + \Lambda_1 \cap \overline{\Lambda}_2$. The obtained scores and zero masks form a new matrix, denoted by $\boldsymbol{T}$.

A main drawback of Wu *et al.*'s model is that high scores may be assigned to pixels that are close to each others, but simultaneously flipping them could cause serious perceptual quality degradation to the host image. This problem is handled by imposing minimum distance constraints between two flippable pixels in [6]. However, the strategy is unsuitable for our watermarking scheme. In [11], the distance factor is considered to develop a quality metric for binary document images. In the metric, a weighted matrix is constructed, each element of which is determined by the reciprocal of a distance measured from the center element. Inspired by this idea, we mitigate the aforementioned drawback by constructing a new weighted matrix $\boldsymbol{D}$ of size $N_3 \times N_3$ in such a way that each element of $\boldsymbol{D}$ is proportional to the distance from the center element. Assuming the center element of $\boldsymbol{D}$ is located at (i_C, j_C), $\boldsymbol{D}$ is defined as follows:

$$D_{i,j} = \begin{cases} 1, & i = i_C, j = j_C \\ \dfrac{a_1\left((i-i_C)^2+(j-j_C)^2\right)}{(N_3-i_C)^2+(N_3-j_C)^2} + a_0, & \text{else} \end{cases} \tag{6}$$

where a_0 and a_1 are two positive numbers satisfying $a_0 + a_1 = 1$. Observing (6), as the distance from the point (i, j) to the center position increases, $D_{i,j}$ grows up, which means the impact of the distance weakens. For the boundary point (N_3, N_3), $D_{i,j} = 1$, which indicates that the distance is far enough to neglect its impact. The factors a_0 and a_1 allow us to adjust the lowest weight and the velocity that the weight $D_{i,j}$ increases. We also see a diagonal neighbor point is considered to be further away from the center point than a horizontal or vertical neighbor one. Hence, diagonal neighbors have less effect on a center point than horizontal or vertical neighbors. The weight matrix is shown in Table I for $N_3 = 5$ and $a_0 = 0.8$.

The final perceptual mask $\boldsymbol{M}$ is obtained by combining the matrix $\boldsymbol{T}$ and the weight matrix $\boldsymbol{D}$. To be specific, for each possibly flipped pixel $X_{i,j}$, $(i, j) \in \overline{\Lambda}_1 \cap \Lambda_2 + \Lambda_1 \cap \overline{\Lambda}_2$, the block $\boldsymbol{B}_{i,j}$ in the matrix $\boldsymbol{T}$ that is centered at (i,j) is multiplied by the weight matrix $\boldsymbol{D}$, yielding

$$\boldsymbol{M}_{i,j} = \boldsymbol{B}_{i,j} \bullet \boldsymbol{D} \tag{7}$$

where $\boldsymbol{M}_{i,j}$ denotes the block in the perceptual mask $\boldsymbol{M}$ that is centered at (i, j).

TABLE I: Weight Matrix for $N_3 = 5$ and $a_0 = 0.8$

1	0.925	0.9	0.925	1
0.925	0.85	0.825	0.85	0.925
0.9	0.825	1	0.825	0.9
0.925	0.85	0.825	0.85	0.925
1	0.925	0.9	0.925	1

IV. Watermark Extraction

The watermark detector receives a distorted, watermarked image, $\boldsymbol{X}_d$, and decodes a message $\hat{m}$ using the linear correlation (LC) based decoder. The Watermark extraction procedure consists of the following steps, as shown in Fig. 2.

Step 1: $\boldsymbol{X}_d$ is transformed into the DCT domain, yielding

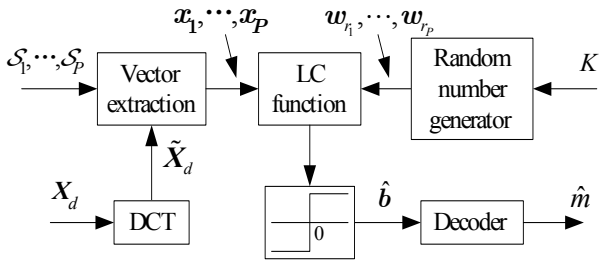

Fig. 2. The extraction procedure of DDW.

the DCT coefficient matrix $\tilde{\boldsymbol{X}}_d$.

Step 2: A set of P vectors $\boldsymbol{x}_j$, $j = 1, \cdots, P$, are extracted from $\tilde{\boldsymbol{X}}_d$ according to the embedding positions $\mathcal{S}_1, \cdots, \mathcal{S}_P$.

Step 3: The watermark patterns $\boldsymbol{w}_{rj}$, $j = 1, \cdots, P$, are generated from the watermark key K as does the watermark embedder.

Step 4: The LC's between the extracted vectors and the watermark patterns are computed as

$$\rho(\boldsymbol{x}_j, \ \boldsymbol{w}_{rj}) = < \boldsymbol{x}_j, \boldsymbol{w}_{rj} >, \ j = 1, \cdots, P \qquad (8)$$

The symbol sequence $\hat{\boldsymbol{b}}$ is determined according to the rule

$$\hat{b}_j = \mathrm{sgn}(\rho(\boldsymbol{x}_j, \boldsymbol{w}_{r_j})), \ j = 1, \cdots, P \qquad (9)$$

where sgn(·) is a sign function defined as

$$\mathrm{sgn}(t) = \begin{cases} 1, & t \geq 0 \\ -1, & t < 0 \end{cases}$$

Step 5: The extracted binary vector $\hat{\boldsymbol{b}}$ is decoded into the message $\hat{\boldsymbol{m}}$.

V. The Effect of Shaping on Decoding

The use of spatial masks improves the watermark transparency, but how do they affect the LC based decoder? This section is dedicated to the theoretic analysis of it.

Since DCT is an orthogonal transform, it can be easily derived

$$< \boldsymbol{X}_d, \boldsymbol{W}_j > = < \tilde{\boldsymbol{X}}_d, \tilde{\boldsymbol{W}}_j > . \qquad (10)$$

According to the property and the relation between $\boldsymbol{w}_{rj}$ and $\tilde{\boldsymbol{W}}_j$, the LC in (8) is rewritten as

$$\rho(\boldsymbol{x}_j, \ \boldsymbol{w}_{rj}) = < \boldsymbol{X}_d, \boldsymbol{W}_j > . \qquad (11)$$

It implies that the watermark extraction can also be performed in the spatial domain. That is useful when the watermark extraction in the DCT domain is inconvenient, but increases the computational costs.

Assuming $\boldsymbol{X}_d = \boldsymbol{X}_b$ and putting (1) and (2) into (11), we have

$$\rho(\boldsymbol{x}_j, \ \boldsymbol{w}_{rj}) \approx \rho(\boldsymbol{X}, \boldsymbol{W}_j) + \alpha < \boldsymbol{M} \bullet \boldsymbol{W}_j, \ \boldsymbol{W}_j > . \qquad (12)$$

Due to the fact $M_{i,j} \geq 0$, $\forall\ i, j$, the terms $\boldsymbol{M} \bullet \boldsymbol{W}_j$ and $\boldsymbol{W}_j$ in (12) are highly correlated. So the LC based decoder works very well with the shaping operation used.

VI. Experimental Results

In order to evaluate the performance of DDW, we conduct a set of experiments on a real binary document image. The original binary document image of size 600 × 600 and the binary watermark image of size 23 × 23 for tests are shown in Fig. 3. In the watermark image, each information bit is repeated three times, resulting in repetitive watermark insertion, hence, simple repetition coding can be used to reduce the decoding errors. The watermarking performance is evaluated in two aspects: imperceptibility and robustness.

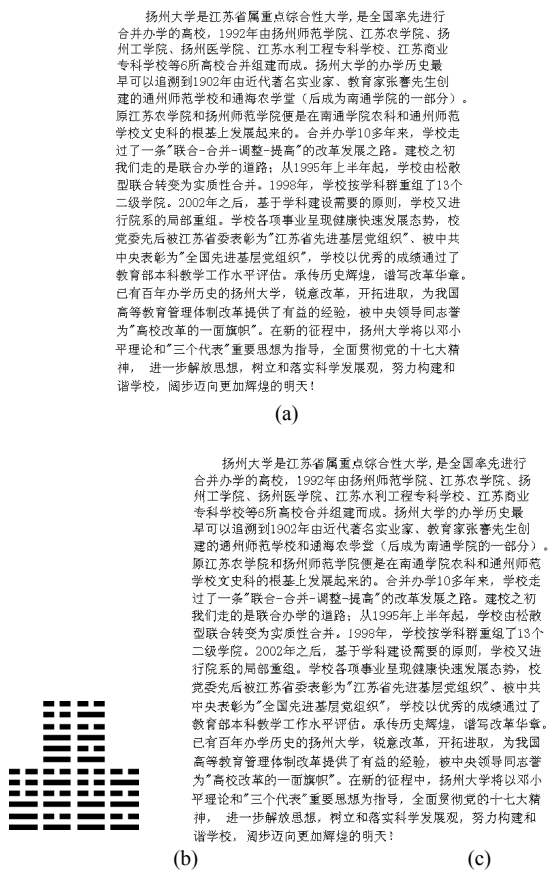

Fig. 3. The input and output images. (a) original image (600 × 600); (b) watermark image (23 × 23); (c) watermarked image with SNR of 17.8 dB and $L = 100$.

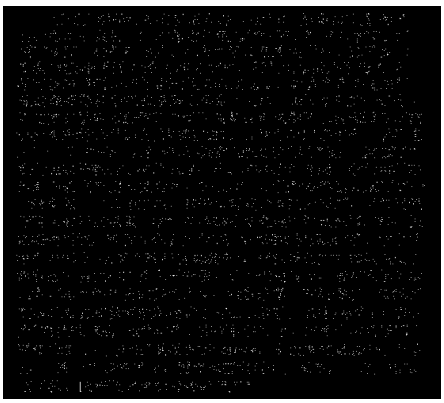

Fig. 4 The difference image between the images in Fig. 3 (a) and (c).

A. Watermark Imperceptibility

By taking $a_0 = 0.8$, we obtained the watermarked image with SNR of 17. 8 dB, shown in Fig. 3 (c). Based upon subjective assessment, there is no visible difference between the original and watermarked image. From the obtained difference image, shown in Fig. 4, we see that the watermark

is reshaped into high activity regions and around edges. This is attributed to the choice of the watermark embedding positions and the use of the spatial perceptual mask. Meanwhile, the watermarked image quality is also affected by the distance between two flipped pixels. The effectiveness can be appreciated from Table. II: the large factor a_0 causes the decrease of the distance between two flipped pixels, which can be clearly observed from the given average distance and maximal distance. According to the viewpoints in [11], increasing the distance between two flipped pixels is in favor of improving the watermark imperceptibility.

TABLE II: THE MAXIMAL, MINIMAL AND AVERAGE DISTANCE BETWEEN TWO FLIPPED PIXELS OVER ALL FONTS IN THE WATERMARKED IMAGE

a_0	0.5	0.6	0.7	0.8	0.9
Maximal Distance	16.85	16.17	16.09	15.24	14.74
Minimal Distance	1.91	1.96	1.81	1.85	1.92
Average Distance	9.05	8.80	8.60	8.30	8.03

B. Watermark Robustness

We tested the robustness of DDW against four kinds of attacks, which include 1) noising attack: Gaussian noise (GN) and salt&pepper noise (SPN) with the standard deviation of noise as the distortion level; 2) denoising attack: Gaussian low pass filter (GLPF) of size 3 × 3 with the standard deviation as the distortion level; 3) geometrical attack: rotation (RO) with the angle as the distortion level, and scaling (SC) with the scaling factor as the distortion level; 4) print-scan (PS) and print-copy-scan (PCS) attacks. For geometrical attacks, the rotation angle is obtained by detecting the text row direction and the scaling factor is determined according to the text size in the tested document. Thus, the resynchronization operation can be performed before watermark extraction. In PS and PCS tests, we used the following equipment: an EPSON Perfection V30 SE 300 dpi scanner, HP LaserJet 1020 600 dpi printer, and a Lenovo M9215 600 dpi copier. The watermark images are extracted from the distorted document images and assessed by the normalized correlation (NC), defined as NC $=< \boldsymbol{b}, \hat{\boldsymbol{b}} > / \|\boldsymbol{b}\|^2$, as well as the bit error rate (BER). These tests are also performed on Wu's method [6] and Qi's method [10]. For fair comparison, the SNR for all the watermarked images isset to 17.8 dB. For DDW, the factor a_0 takes the value of 0.8.

Samples of the extracted watermark images are exhibited in Fig. 5. The results for NC and BER are summarized in Table. III. As can be seen, DDW is highly robust to additive noise and can effectively resist the GLPF attack with the standard deviation beneath 1. Applying the resynchronization operation, DDW is almost invariant to rotation and achieves very good resistance to scaling. Particularly, the watermark embedded by DDW successfully survives PS attack, but seems less robust to PCS attack. Further, the effectiveness of repetition coding is investigated in Fig. 5. Clearly, DDW becomes more robust by using repetition coding and is even able to resist PCS attack. In all the experiments, DDW significantly outperforms the two compared schemes.

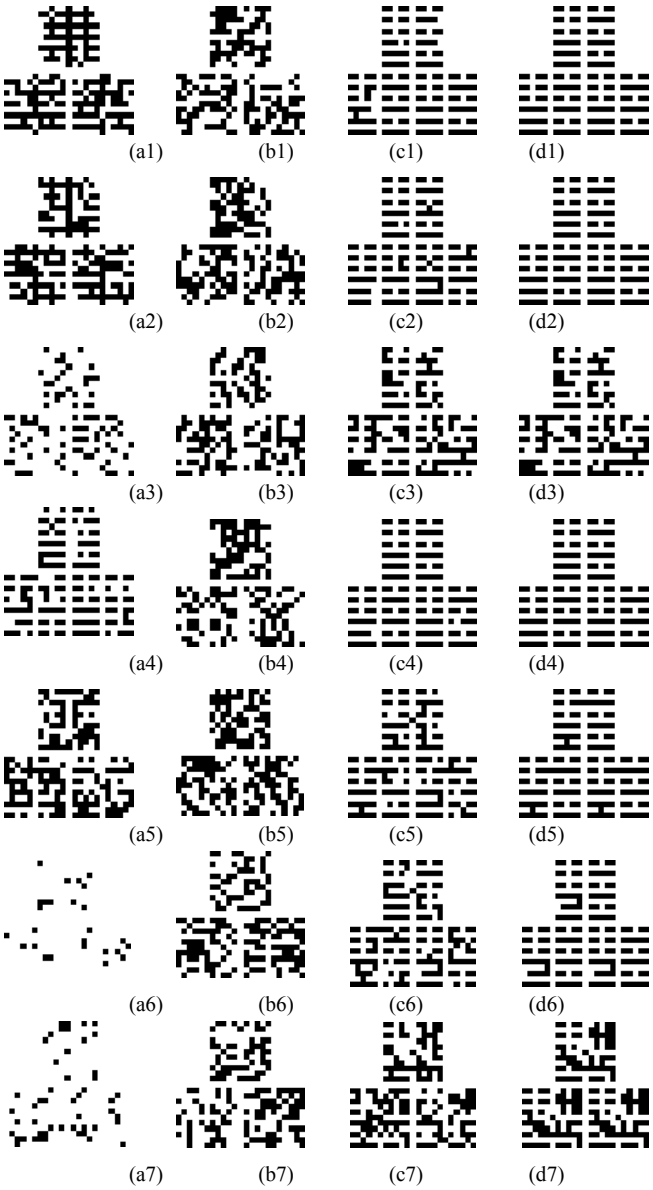

Fig. 5 Examples of the extracted watermark images obtained from Wu [6] (1st column), Qi [10] (2nd column), DDW (3rd column) and DDW with repetition coding (4th column) under different attacks. GN 0.08 (1st row), SPN 0.14 (2nd row), GLPF 0.8 (3rd row), RO 30° (4th row), SC 0.8 (5th row), PS (6th row) and PCS (7th row). The NC and BER for 1st to 3rd column are reported in Table. III and for the last column are as follows: d1), d2) and d4) NC = 0, BER = 1; d3) NC = 0.944, BER = 0.028; d5) NC = 0.833, BER = 0.084; d6) NC = 0.969, BER = 0.016; d7) NC = 0.626, BER = 0.187.

VII. CONCLUSION

The novel DDW for binary document image is proposed in this paper. The watermark is first constructed in the DCT domain with the embedding positions considered. After performing IDCT, it is weighted by the spatial mask and inserted into the host binary image. Due to the use of the spatial mask, the watermark is reshaped into high activity regions and around edges, and the distance among those flipped pixels are enlarged. The LC based decoder is utilized for watermark extraction. The approach exploits the information from the spatial and DCT domains for embedding, but neither DCT nor IDCT is directly carried out on the host image, thus not introducing the loss of watermark. Experiments demonstrate that DDW achieves good

watermark imperceptibility and extremely strong robustness against common image manipulations, geometrical attacks and even PS process.

TABLE III: NC AND BER OF THE EXTRACTED WATERMARK UNDER DIFFERENT ATTACKS

Attacks	Wu [6]		Qi[10]		DDW	
	NC	BER	NC	BER	NC	BER
No attack	1	0	1	0	1	0
GN 0.04	1	0	0.953	0.023	0.995	0.003
0.08	-0.808	0.904	0.190	0.405	0.953	0.023
0.26	0.527	0.236	0.003	0.499	0.735	0.133
0.36	-0.003	0.501	-0.049	0.525	0.688	0.156
SPN 0.04	0.725	0.138	0.662	0.169	0.979	0.010
0.14	-0.678	0.839	0.070	0.465	0.943	0.029
0.24	0.626	0.187	0.013	0.494	0.849	0.075
0.34	-0.517	0.758	-0.008	0.504	0.730	0.135
GLPF 0.6	0.938	0.031	0.756	0.122	0.984	0.008
0.8	0.247	0.377	0.091	0.455	0.662	0.169
1	0.247	0.377	0.195	0.403	0.636	0.182
1.2	-0.179	0.590	-0.143	0.571	-0.184	0.592
RO 5°	1	0	0.984	0.008	1	0
15°	0.995	0.003	0.486	0.257	0.995	0.003
30°	0.844	0.078	-0.044	0.522	0.979	0.010
40°	0.777	0.112	-0.060	0.530	0.948	0.026
SC 0.5	-0.127	0.564	0.117	0.442	0.184	0.408
0.8	0.444	0.278	-0.023	0.512	0.855	0.073
1.2	1	0	0.886	0.057	0.990	0.005
1.5	1	0	0.964	0.018	0.995	0.003
PS	0.122	0.439	0.112	0.444	0.803	0.099
PCS	0.086	0.457	0.029	0.486	0.475	0.262

ACKNOWLEDGMENT

The authors would like to thank the anonymous reviewers for their detailed comments that improved both the editorial and technical quality of this paper substantially.

REFERENCES

[1] Z. Jalil and A. M. Mirza, "A review of digital watermarking techniques for text documents," in *Proc. Int. Conf. Information and Multimedia Technology*, Dec.2009, pp. 230–234. 2009.

[2] D. Huang and H. Yan, "Interword distance changes represented by sine waves for *watermarking* text images," *IEEE Trans. Circuits Syst. Video Technol.*, vol. 11, no. 12, pp. 1237–1245, 2001.

[3] A. Varna, S. Rane, and A. Vetro, "Data hiding in hardcopy text documents robust to print, scan and photocopy operations," in *Proc. IEEE Int. Conf. Acoustics, Speech and Signal Processing*, 2009, pp. 1397–1400.2009.

[4] S. Thiemert, M. Steinebach, and P. Wolf, "A digital watermark for vector-based fonts," in *Proc. 8th ACM Multimedia and Security Workshop*, pp. 120–123. 2006.

[5] U. Topkara, M. Topkara, and M. J Atallah, "The hiding virtues of ambiguity: quantifiably resilient watermarking of natural language text through synonym substitutions," in *Proc. 8th workshop on Multimedia and* security, pp. 164–174. 2006.

[6] M. Wu and B. Liu, "Data hiding in binary images for authentication and annotation," *IEEE Trans. Multimedia*, vol. 6, no. 4, pp. 528–538, Aug. 2004.

[7] Y. Liu, J. Mant, E. Wong, and S. Low, "Marking and detection of text documents using transform-domain techniques," in *Proc. SPIE Conf. Security and Watermarking of Multimedia Contents*, Jan. 1999, pp. 317–*328*.1999.

[8] H. Lu, X. Shi, and Y. Q. Shi, "Watermark embedding in dc components of dct for binary imges," in *Proc. IEEE Int. Workshop on Multimedia Signal Processing*, pp. 300–303. 2002.

[9] H. Yang and A. C. Kot, "Orthogonal data embedding for binary images in *morphological* transform domain-a high-capacity approach," *IEEE Trans. on Multimedia*, vol. 10, no. 3, pp. 339–351, April 2008.

[10] W. Qi, X. Li, B. Yang, and Daofang Cheng, "Document watermarking scheme for information tracking," *Journal on Communications*, vol. 29, no. 10, pp. 183–190, Oct. 2008.

[11] H. Lu, A. C. Kot, and Y. Q. Shi, "Distance-Reciprocal Distortion Measure *for* Binary Document Images," *IEEE Signal Processing Letters*, vol. 11, no. 2, pp. 228-231, February 2004

Xinshan Zhu was born in Xinmin, China, in 1977. He received the B. S. degree and the M.S. degree in automation control from Harbin Institute of Technology, Harbin, China, in 2000 and 2002, respectively, and the Ph.D. degree in pattern recognition and intelligent system from Institute of Automation, Chinese Academic Sciences, Beijing, China, in 2005. He was a post-doctoral researcher at Institute of Computer Science & Technology, Peking University, Beijing, between 2005 and 2007. Since 2008, he has been an Associate Professor of Information Engineering College, Yangzhou University, Yanghzou, China. His research interests include algorithms for audio, image and video coding and processing, multimedia security, and data hiding.

Lei Wen was born in Suzhou, China, in 1987. He received the B. S. degree in Computer Science and Technology from Guangling College of Yangzhou University, Yangzhou, China, in 2009. Currently, he is pursuing the M.S. degree in computer science in the Information Engineering College, Yangzhou University, China. His research interests include data hiding and multimedia security.

Yanming Chen was born in Yangzhou, China, in 1985. He received the B. S. degree in information science and engineering from Yancheng Teachers College, Yancheng, China, in 2008, and the M.S. degree in Computer Science and Engineering from Yangzhou University, Yanghzou, China, in 2011. Currently, he is an Information Clerk of the Recruitment Information Department, Office of Yangzhou Human Resources Market Management, Jiangsu, 225000 China. His research interests include data hiding and multimedia security