International Journal of Computer and Electrical Engineering, Vol.2, No.6, December, 2010
1793-8163

Frequency Excursion and Temperature control of Combined Cycle Gas Plant Including SMES

First A. J. Raja, Second B. Dr. C. Christober Asir Rajan and Third C. Y.Thiagarajan

***Abstract*— This paper presents a MATLAB – SIMULINK based Dynamic model of a combined cycle stand alone gas power plant the transfer function model of load frequency and temperature control loop has been developed. The objective of this proposed work is to regulate the frequency and temperature in order to maintain the system stability of the power plant. Since most of the loads are induction type and the induction motor speed is directly proportional to frequency, the frequency has to be maintained within the limits. If temperature is low, it cause low efficiency of the heat recovery boiler and maintaining temperature higher than allowed will reduce life of the equipment. Hence the temperature has to be regulated to have safe operation of the power plant. Considering these backgrounds, it is important to study dynamic behavior of combined cycle plants. Hence it has been developed the dynamic model for a single shaft combined cycle plant. In this paper the analysis of power plant response to electrical load and frequency transients with the effects of SMES is presented**.

***Index Terms*— Frequency control, stability analysis, Steam turbine, Superconducting Magnetic Energy Storage, temperature control.**

I. INTRODUCTION

The energy mix of the electricity grid in India has changed greatly over the last decade, with an increasing proportion of combined cycle gas turbine (CCGT) units now being utilized for ancillary services, such as frequency response. Historically, the provision of frequency response has been dominated by coal fired stations that have proven to be very reliable. But a large number of these units will be retired in the coming decade. With these changes in plant mix and an increasing in the proportions of renewable generation expected by 2010, a firm understanding behind the collective dynamic behaviors of generator response is required.

The basic principle of the Combined Cycle is simple, burning gas in a gas turbine produces not only power - which can be converted to electric power by a coupled generator but also fairly hot exhaust gases. Routing these gases through a water-cooled heat exchanger produces steam, which can be turned into electric power with a coupled steam turbine and generator. This set-up of Gas Turbine, waste-heat boiler, steam turbine and generators is called a combined cycle. This type of power plant is being installed in increasing numbers round the world where there is access to substantial quantities of natural gas. This type of power plant produces high power outputs at high efficiencies and with low emissions. It is also possible to use the steam from the boiler for heating purposes so such power plants can operate to deliver electricity alone.

During the last decades there has been continuous development of combined cycle power plants due to their increased efficiency and their low emissions efficiencies are very wide ranging depending on the lay-out and size of the installation and vary from about 40-56% for large new natural gas- fired stations. The dynamic response of such power plants to load and frequency transients is rather problematic, since the compressor and the fuel supply system are both attached to the shaft of the unit. Thus rotor speed and frequency have a direct effect on air and fuel supply, [3] which introduces a negative effect on system stability (CIGRE, 2003).

In addition, combined cycle power plants function on the temperature limits (above a relatively low power level) so as to achieve the best efficiency in the steam generator (CIGRE,2003). This fact raises further issues relative to the response of combined cycle power plants (CCPP) during frequency drops or variations at load power. Temperature should be maintained (apart from the first 20 seconds of the disturbance) below certain limits for the protection of the plant. This paper is based on the modeling proposed [4] in Kakimoto and Baba (2003) and Rowen [8] (1983), while the model developed is integrated into an educational and research simulation package developed in the Electrical Energy Systems Lab of NTUA (Vournas et al.,2004). Other similar models are presented in Kunitomi et al.[5] (2003), Lalor et al. (2005), Zhang and So (2000), which, however, are slightly different. For instance, in Lalor and O'Malley (2003) [7] the structure of the steam turbine is more detailed, while in this paper we use a simplified steam turbine model.

In this paper, the analysis of dynamic behavior of a combined cycle plant for frequency drops is evaluated. Several dynamic model of the combined cycle plant have been proposed [1]–[8]. It has been combined some of them and build a model for a single-shaft combined cycle plant. The execution of numerical simulations to see how the combined cycle plant behaves when the system frequency drops.

A. J.Raja is with the Sri Manakula Vinayagar Engineering College, Madagadipet, Puducherry - 605 107. Phone: +959443837388; e-mail: rajaj1980@rediff.com)

B. Dr.C.Christober Asir Rajan is Associate Professor with the Department of Electrical and Electronics Engineering, Pondichery Engineering College, Puducherry; e-mail: asir_70@hotmail.com.

C. Y.Thiyagarajan is with the Sri Manakula Vinayagar Engineering College, Madagadipet, Puducherry - 605 107. Phone: +919994482575; e-mail: thiagu2517@gmail.com)

The gas turbine (Brayton) cycle is one of the most efficient cycles for the conversion of gas fuels to mechanical power or electricity. The use of distillate liquid fuels, usually diesel, is also common where the cost of a gas pipeline cannot be justified. Gas turbines have long been used in simple cycle mode for peak loading in the power generation industry, where natural gas or distillate liquid fuels have been used, and their ability to start and shut down on demand is essential. Gas turbines have also been used in simple cycle mode for base load mechanical power and electricity.Generation in the oil and gas industries, where natural gas and process gases have been used as fuel. Gas fuels give reduced maintenance costs compared with liquid fuels, but the cost of natural gas supply pipelines is generally only justified for base load operation. The combined cycle power plant model shown in Fig 3.The thermodynamic part from the available thermal power to the gas turbine and the steam turbine is modeled by algebraic equations given in section IV, corresponding to the adiabatic compression and expansion, as well as to the heat exchange in the recovery boiler. These corresponding equations correspond to the block 'Algebraic equations of energy transform are in subsystem Fig 4. These algebraic equations are presented in reference Spalding and Cole et,al.[9]. This Paper includes a supervisory control of the combustion temperature, presenting a stability analysis of control loops through linearization and eigen values for with and without SMES proposing a method to stabilize the plant response to frequency transients during various load operation.

The effective use of SMES unit greatly depends on its control strategy. Many kinds of controller for the SMES have been proposed in literature. [27-28]. the gain settings of SMES controllers are usually fixed at values which are determined based on nominal operating point [29]. These fixed gain controllers are always compromise between the best setting for light and heavy load conditions, such as that resulting from a sudden increase in load in power system. To solve this problem, a PI controller was proposed for the SMES unit in reference [30]. Based on the system eigen values, the controller parameters were determined to provide active power compensation to the power system.

The paper is structured as follows: In Section II demonstrates the necessity for the introduction of speed control. Section III presents the necessity for the introduction of temperature control. The modeling of power plant is presented in Section IV. Section V explain the structure of energy storing device SMES. Section VI shows the stability of control loops and presents the eigen values of the linearized model, as well as a stable response to a frequency drop. In Section VII Result discussion is presented. Conclusion is presented in final section.

II. Speed Control Loop

Fig. 1 shows the structure of speed control loop. Basic structure of load-frequency loop has main control loop, during normal operating conditions. The first loop involves the speed governor, which detects frequency deviation from the nominal value and determines the fuel demand signal (F_d) so as to balance the difference between generation and load. Autonomous operation is assumed, so power imbalances will cause electrical frequency deviations. In single shaft combined cycle power plants, the fuel control system as well as the fans, which provide air to the compressor, are attached to the generator shaft, so their performance is directly linked to rotor speed. This affects the stability of the system. Without speed control, a decrease in frequency will result in a decrease in air and fuel flow (W and W_f), as the shaft of the plant will reduce its speed. The decrease of these two parameters will cause a decrease in power generation and consequently the frequency will continue to drop. So even if only a small transient disturbance is applied, it will eventually lead the uncontrolled unit, as at some point the under frequency protection of the plant will be activated. The response of frequency to such a temporary load increase without speed control is shown in Fig 5 with the disturbance in electrical load. Therefore, it becomes obvious that speed regulation is absolutely necessary for the stability of the combined cycle plant.

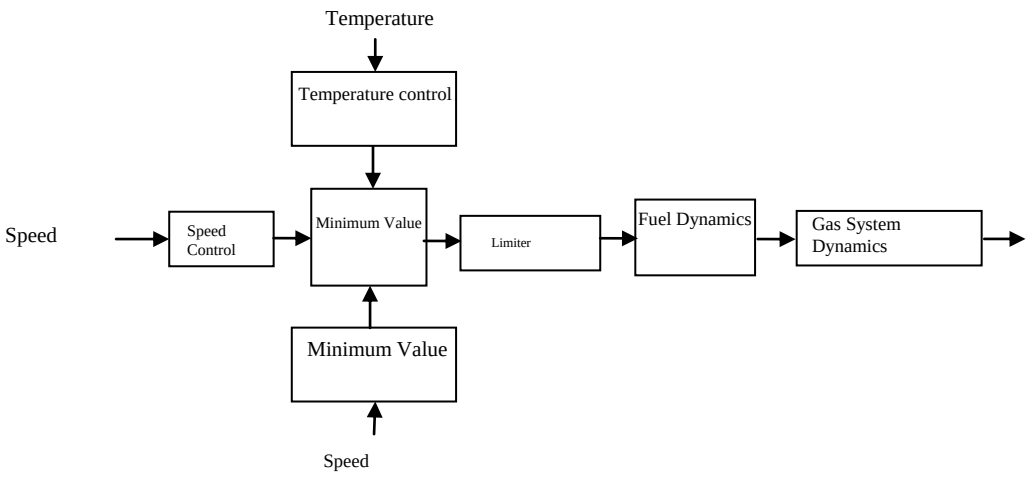

Figure 1 Structure of Speed control loop

III. Temperature Control Loop

Fig 2 shows the basic structure of temperature control loop consists of two branches. The normal temperature control branch acts through the air supply control. When the temperature of the exhaust gases exceeds its reference value (T_r), the controller acts on the air valves to increase the airflow, so as to decrease exhaust gas temperature. In certain situations, however, this normal temperature control is not enough to maintain safe temperatures.

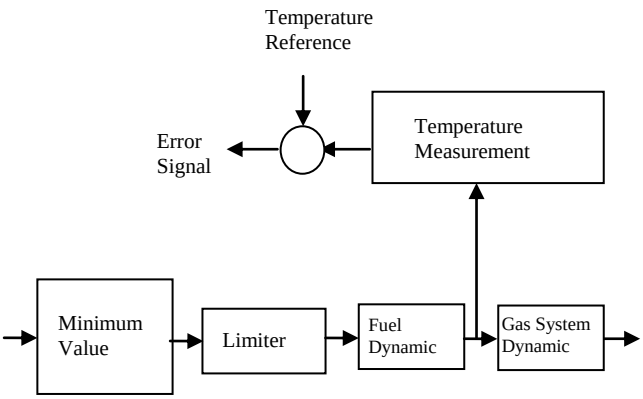

Figure 2 Structure of Temperature control loop

Thus, in cases of a severe over heat, the fuel control signal is reduced through a low-value-select function (LVS) that determines the actual fuel flow into the combustion chamber. Reference temperature (T_r) is the parameter defined by the supervisory control for the exhaust gas temperature (T_e). This control branch reacts by decreasing T_r when gas turbine inlet temperature (T_f) exceeds its nominal value. Low value select: Inputs to the LVS are the fuel demand signal determined by the speed governor and an overheat control variable, which decreases from an initial ceiling value when the exhaust temperature exceeds its reference. During the operation of the unit, only one of the control branches is active, the one whose control variable has the lowest value. The Fig 3 shows the block diagram of the load frequency control loop of the combined cycle power plant combines the gas turbine and steam turbine with speed and temperature control loop.

IV. Combined Cycle

The CCGT model shown in Fig 3 consists of the power generation units and the control branches. The thermodynamic part from the available thermal power to the gas turbine, the steam turbine is modeled by, corresponding to the adiabatic compression and expansion, as well as to the heat exchange in the recovery boiler by algebraic. These equations correspond to the block 'Algebraic equations of energy transform' in Fig 4. These algebraic equations are presented below (Spalding and Cole, 1973): From the adiabatic compression equation the following relation holds, where x is the ratio of input-output temperatures for isentropic Compression:

$$X = \left(P_r\right)^{\frac{\gamma-1}{\gamma}} \tag{1}$$

In equation (1) P_r is the actual compressor ratio. For nominal airflow (W=1pu), this is equal to the nominal ration P_{r0}. When airflow is different from nominal (W≠1), the actual compression ratio is.

$$P_r = P_{ro} * W \tag{2}$$

and therefore:

$$X = \left(P_{ro} * W\right)^{\frac{\gamma-1}{\gamma}} \tag{3}$$

From the definition of compressor efficiency

$$\eta_c = \frac{t_{d,is} - t}{t_d - t} \tag{4}$$

From which, based on the definition of X in equation (1)

$$t_d = \frac{t_1(1 + X - 1)}{\eta_c} \tag{5}$$

The gas turbine inlet temperature depends on the fuel to air ratio (assuming that air is always in excess). The temperature rises with the fuel injection W_f and decreases with airflow W.From the energy balance equation in the combustion chamber, the following normalized equation results:

$$W_f = \frac{W(t_f - t_d)}{(t_{fo} - t_{do})} \quad (6)$$

Then

$$t_f = t_d + (t_{fo} - t_{do}) * \frac{W_f}{W} \quad (7)$$

Similar to (4), the gas turbine efficiency is given by

$$\eta_t = \frac{t_{t,is} - t}{t_t - t} \quad (8)$$

For the adiabatic expansion, in equation (3) that the right hand side is the same as in the compression (the mass that enters the compressor is the same with the one in the output of the gas turbine) which is:

$$X = \frac{T_f}{T_{c,is}} \quad (9)$$

from which we obtain for the actual exhaust temperature similarly to (5):

$$t_e = \frac{t_f[l - (l-1)\eta_t]}{X} \quad (10)$$

The power produced by the gas turbine is proportional to temperature difference (t_f–t_e), and the mechanical power consumed in the compressor is proportional to (t_d–t_i). Both are also proportional to airflow W (we assume that the mixture of air and gas is almost equal to airflow). Therefore the net power converted to mechanical is:

$$E_g = K_o[(t_f - t_e) - (t_d - t_i)] * W \quad (11)$$

The thermal power absorbed by the heat exchanger of the recovery boiler is proportional to airflow and exhaust temperature.

$$E_S = K_1 * t_e * W \quad (12)$$

The control branches and the transfer functions are shown in Fig 3 Note that in the control loop temperature variables are replaced by normalized variables T_f, T_e defined as:

$$T_f = \frac{t_f - 273}{t_{fo}} \quad (13)$$

$$T_e = \frac{t_e - 273}{t_{eo}} \quad (14)$$

Note that t_f and t_e are in Kelvin degrees. While t_{f0} and t_{e0} are in Celsius. Thus for normalized conditions $T_f = T_e = 1$ (pu).As can be easily observed, there are eight independent variables in the algebraic equations (3), (5), (7) and (10)-(14). Thus, in order to solve the system during dynamic simulation it is necessary to define fuel flow and airflow, as shown in the corresponding block of Fig 3 & Fig 4.

V. SMES SYSTEM

The SMES unit contained DC Superconducting coil and converter which are connected by Star- Delta/Delta-Star transformer. The control of the converter firing angle provides the DC voltage E_d appearing across the inductor to be continuously varying within a certain range of positive and negative values. The inductor is initially charged to its rated value I_{do} by applying a small positive voltage. Once the current reaches the rated value, it is maintained constant by reducing the voltage across the inductor to zero since the coil is Superconducting [24-25]. Neglecting the transformer and the converter losses, the DC voltage is given by equation (15) Where E_d is DC voltage applied to the inductor (KV), α is firing angle (°), I_d is the current flowing through the inductor (KA).

$$E_d = 2V_{do}\text{Cos}\alpha - 2I_dR_c \quad (15)$$

R is the equivalent commutating resistance (ohm) and V_{do} is maximum circuit bridge voltage (kv). Charge and discharge of SMES unit are controlled through change of commutation angle. If alpha is less than 90 ° , converter acts in rectifier mode and if alpha is greater than 90 ° , the converter acts as inverter mode. In combined cycle power plant operation, the DC voltage E_d across the super conducting conductor is continuously controlled depending on error signal. In this study, as in recent literature, inductor voltage deviation of SMES unit of each area is based on error of the same area in power system. Moreover the inductor current deviation is used as a negative feed back signal in SMES control Loop. So the current variable of SMES unit is intended to be settling its steady state value. If the load demand changes suddenly, the feed back provide the prompt restoration of current. The inductor current must be restored to its nominal value quickly after system disturbances, so that it can respond to the next load disturbance immediately. As a result, the equations of inductor voltage deviation and current deviation for each area in Laplace domain are as follows:

$$\Delta E_{di}(s) = K_{oi}\frac{1}{1+ST_{dci}}\Delta f_i(s) - K_{Idi}\frac{1}{1+ST_{dci}} * \Delta I_{di}(s) \quad (16)$$

$$\Delta I_{di}(s) = \frac{1}{SL_i}\Delta E_{di}(s) \quad (17)$$

Where, K_{idi} is the gain for feedback. T_{dci} is the converter time delay, K_{oi} (KV/Unit) is gain constant and L_i (H) is the inductance of the coil. the deviation in the inductor real power of SMES unit is expressed in time domain as follows.

$$\Delta P_{smi}(t) = \Delta E_{di}I_{dio} + \Delta I_{di}\Delta E_{di} \quad (18)$$

This value is assumed positive for transfer from AC grid to DC. The energy stoered in SMES at any instant in time domain is given as follows.

$$W_{smi}(t) = \frac{L_i I_{di}^2}{2} \text{ (MJ)} \quad (19)$$

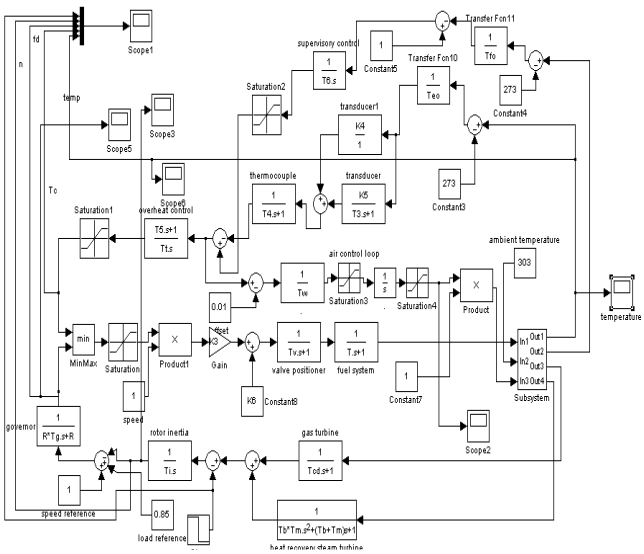

Figure 3 MATLAB–SIMULINK Model of Single shaft CCGT with Temperature and Speed Control Loop

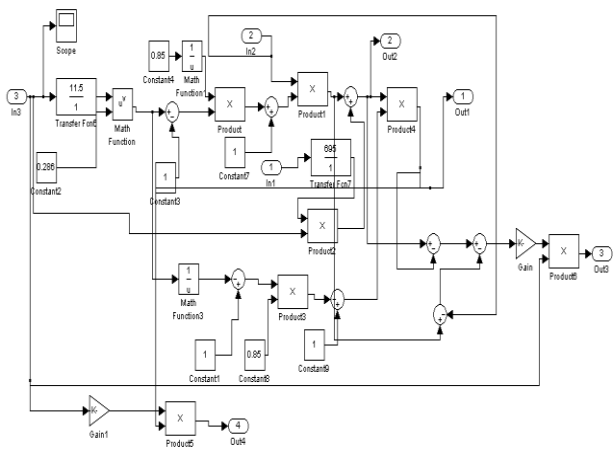

Figure 4 Sub System

VI. Stability of Control Loop

The Low-Value-Select (LVS) function acts like a switch that activates one of the two control loops (frequency or overheat) by selecting the lower value of the two control variables (T_c or F_d). Since, as discussed above, the speed control is vital for the stability of the system, its temporary interruption by the LVS during overheat conditions is critical. The calculation of linearized system eigen values is obtained separately with and without SMES for the case where the speed control, or the temperature control, branch is active. The calculated eigen values are presented in Table I&II. This table shows that when the speed loop is active the system is stable, whereas with the LVS switched to overheat control, the system becomes unstable with a positive eigen value corresponding to shaft speed. Thus, a necessary condition for the system to achieve a steady state after a disturbance is that the LVS is reactivates by speed control soon enough. The other eigen values of Table I&II shows a satisfactory behavior (relatively fast and without undamped oscillations) of the combined cycle plant.This type of control (switching between stable and unstable systems) is typical of "sliding mode" control systems (Utkin et al., 1999). It should be noted that a switching system could become temporarily unstable but still maintain its overall stability by switching device (LVS in our model) performs.

TABLE-I: EIGEN VALUES

S. No	Open Loop	Speed Control Loop	Temperature Control Loop
1.	-72.5	-73.8646	-70.4523
2.	-19.99	-19.995	-19.994
3.	8.0031	-3.9985	-2.0001
4.	0.0026	-0.0062	0.0016
5.	0.2405	-1.6406	0.1256
6.	-	-0.5095 + 0.6308i	0.4095+0.5830i
7.	-	-0.0003	-0.0003
8.	-	-0.0755	-0.0551

TABLE-II: EIGEN VALUES

S. No	Open Loop	Closed Loop Without SMES	Closed Loop With SMES
1.	-72.5	-76.8646	-76.8646
2.	-19.99	-19.9985	-33.2545
3.	8.0031	-5.0062	-19.9985
4.	0.0026	-1.6406	-5.0062
5.	0.2405	-0.5095 + 0.6308i	-1.6406
6.	-	-0.5095 - 0.6308i	-0.5095 + 0.6308i
7.	-	-0.0280	-0.5095 - 0.6308i
8.	-	-0.0001	-0.0000
9.	-	-0.2400	-0.0755
10.	-	-	-0.0280
11.	-	-	-0.2400

At this point it is necessary to note that the airflow control branch, which performs the normal temperature control, has a major influence on the overall stability of the system. When this branch is active, it is possible to increase the power generation without overheating, as a proportional increase of fuel and air will maintain the combustion temperature constant according to Section IV. Thus, with proper airflow control, even if the system passes temporarily to the unstable operation, it can eventually end up in a stable steady state. During a disturbance (e.g. decrease of frequency or increase of the load), due to the high gain and the small time constant of the speed control loop, a quick increase of the fuel demand signal is observed. Thus, soon after the disturbance, the LVS function activates the temperature control to avoid overheating. When the air control functions properly, it allows the increase of the power produced with constant temperature. In this way the frequency error decreases, resulting in the decrease of fuel demand F_d and the system returns to the stable operation of frequency control and ends up in steady state. If, on the other hand, the generation is not increased, the system does not return to the stable loop of speed control and the plant will go out of service. The normal response of the plant for an instantaneous 3% frequency drop is shown in Fig 5 for an initial operating point corresponding to 85% of nominal power output. The frequency drop through the speed governor control immediately results in an increase of F_d causing the value of this parameter to exceed the ceiling of 110%, while temperatures increase and overheat control is activated.

VII. RESULT ANALYSIS

The parameter for gas and steam turbine are obtained from [4] and [19]. In this study, we consider a small system composed of a combined cycle plant and a step and ramp load. The rated output power is 32.5MW (Gas turbine 22.9 MW, Steam turbine power 9.6 MW). For gas turbine parameters are taken from [20]. The parameters are listed in the Appendix-I. In single shaft combined cycle power plants, the fuel control system as well as the fans, which provide air to the compressor, are attached to the generator shaft, so their performance is directly linked to rotor speed. This affects the stability of the system which is presented in section VI. Without speed control, a decrease in frequency will result in a decrease in air and fuel flow, as the shaft of the plant will be reducing its speed. The decrease of these two parameters will cause a decrease in power generation and consequently the frequencies continue to drop. So even if only a small transient disturbance is applied, it will eventually lead the uncontrolled unit out of service, as at some point the under frequency protection to the plant will be activated. The response of frequency such a temporary load increase without control loop is shown in Fig 5 together for disturbance of step and ramp electrical load.

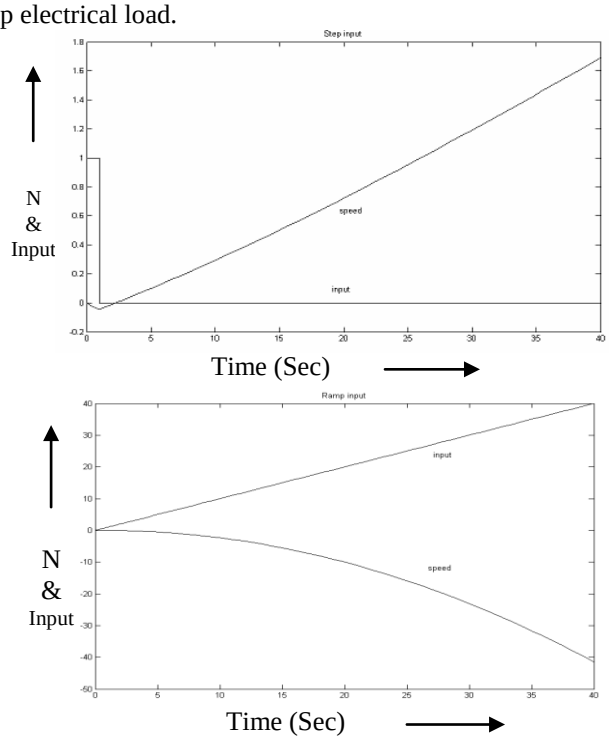

Figure 5 Open loop response of CCGT

Therefore, it becomes obvious that speed regulation is absolutely necessary for the stability of the combined cycle plant. Two control loops are introduced so that the combined cycle unit functions properly. The first one is the frequency control loop, which includes the speed governor. The second one is the overheat control loop. The first loop involves the speed governor, which detects frequency deviation from the nominal value and determines the fuel demand signal so as to balance the difference between the generation and load. Autonomous operation is assumed, so power imbalance will cause electrical frequency deviations.

The second loop is the temperature control and consists of two branches. The normal temperature control branch acts through the air supply control. When the temperature of the exhaust gases exceeds its reference value, this controller acts on the air valves to increase the airflow, so as to decrease exhaust gas temperature. In certain situations, however, this normal temperature control is not enough to maintain safe temperatures. Thus, in cases of a severe overheat the fuel control signal is reduced through a low-value-select function that determines the actual fuel flow into the combustion chamber. Reference temperature (T_r) is the parameter defined by the supervisory control for the exhaust gas temperature (T_e). This control branch reacts by decreasing Tr when gas turbine inlet temperature (T_f) exceeds its nominal value.

Fig. 6 shows during a disturbance (e.g. decrease of frequency or increase of the load), due to the high gain and the small time constant of the speed control loop, a quick increase of the fuel demand signal is observed. Thus, soon after the disturbance, the LVS function activates the temperature control to avoid overheating. When the air control functions properly, it allows the increase of the power produced with constant temperature. In this way the frequency error decreases, resulting in the decrease of fuel demand F_d and the system returns to the stable operation of frequency control and ends up in steady state. If, on the other hand, the generation is not increased, the system does not return to the stable loop of speed control and the plant will go out of service. Fig. 7 shows dynamic response of combined cycle power plant with speed control and temperature control is active for step electrical load input, from the result the speed control and temperature is necessary for stability operation of CCGT.

In this work the effectiveness of SMES is investigated for a CCGT is considered as a model. Figure 8 shows the behavior of power oscillation with respect to change in frequency. With out SMES control power system is able to generate power but power system produces more oscillations and settling time. But in case of CCGT with SMES model, when there is a sudden rise in the demand of load, the stored energy is almost immediately released through the Power control system to the grid as line quality AC. As the governor and other control mechanism starts new equilibrium position and it can be seen that the oscillations are practically damped out, and the settling time reduces. It is also confirmed experimentally that the capacity of CCGT can be increased significantly with the proposed stabilizing control by SMES.

VIII. CONCLUSION

This model including generator unit and SMES unit together represents the realistic performance of power system with the presents of step signal. The obtained results can be summarized as follows: (i) The simulation results of dynamic response reveals that the speed control loop is necessary for the stability of the gas power plant, as frequency feedback in the fuel flow and air flow render the plant very sensitive to disturbances. The model for a stability of a single shaft combined cycle plant as well as its control loop is analyzed. Furthermore, behaviors of plant for step and ramp signal is analyzed. Without speed control, the plant is unstable. Thus by implementing the speed control loop the stability of the plant is improved and the system ends up in the stable state (ii) The temperature control designed is to measure and control the turbine exhaust temperature. Thus

by implementing the temperature control loop, the exhaust temperature is regulated and the safe operation of the power plant is obtained. Hence the stability of the power plant also increased. Air control contributes significantly to the stability of the plant, as it can help's to controls the turbine temperature by increasing the power generation. (iii) The proposed model is non linear since the model response is relatively slow, some blocks with small time constants could be ignored in order to reduce the order of the model, non linearity and simplifies the calculations. PONDICHERRY POWER CORPORATION LIMITED (PPCL) is the combined power plant which comprises gas and steam power plant. In PPCL they are generating 32.5 MW. The output from the gas power plant is about 22.9 MW and from the steam power plant is about 9.6MW. GAIL (Gas Authority Of India Limited) provides the natural gas for PPCL. The gas consumption per day is 190000m^3.The fuel cost per month is about 2 crore).

APPENDIX – I

t_i =303 K, t_{d0} = 390 C, t_{f0} =1085 C, t_{e0} =532 C, P_{r0} =11.5, γ=1.4, η_c=0.85, η_t=0.85, R=0.04, T_t=0.469, T_{cmax}=1.1, T_{cmin}=0, F_{dmax}=1.5, F_{dmin} =0, T_v =0.05, T_F = 0.4,g_{max} = 1.001, g_{min} =0.73,T_w = 0.4669, T_{cd} =0.2, T_{off} = 0.01,K_0 = 0.0033, K_1 = 0.00043,T_g = 0.05,K_4 = 0.8,K_5 = 0.2,T_3 =15,T_4 = 2.5, T_5 =3.3, K_3 =0.77,K_6 =0.23,T_6 = 60,T_m = 5,T_b = 20,T_I = 18.5.

REFERENCES

[1] J.Raja, Dr.C.Christober Asir Rajan, "Dynamic Model of Interaction between frequency and Temperature control in a Combined Cycle Plant", Proceeding of 1st International Conference On Advances in Energy Conservation Technologies (ICAECT-2010),MIT,MANIPAL, Karnataka State, INDIA, Jan 07-10,2010,pp 147-156.

[2] J.Raja, Dr.C.Christober Asir Rajan, "Stability Analysis and Dynamic Modeling of Frequency Excursion and Temperature Control in a Combined Cycle Plant", Proceeding of 1st International Conference On Research Advances in Energy System (ICRAES'10),KSR College of Engineering, Kongu, Tamil Nadu State, INDIA, Jan, 2010,pp 54-66.

[3] CIGRE, 2003, "Modeling Gas Turbines and Steam Turbines in Combined-Cycle Power Plants", International Conference on Large High Voltage Electric Systems, Technical Brochure.

[4] Kakimoto, N., Baba.K., 2003,"Performance of Gas Turbines Based Plants During Frequency Drops," IEEE transactions on power systems. Vol. 18 No.3, pp.1110-1115.

[5] Kunitomi,K.,kurita,A.,Tada,Y.,Ihara,s.,price,W.W.,Richardson,L.M,Smith,G.,2003,"Modeling Combined-cycle power plant for Simulation of Frequency Excursions", IEEE Transactions on Power Systems, vol. 18,No.2,pp. 724-729.

[6] Lalor,G.,o'Malley,M.,2003,"Frequency control on an island power system with increasing proportions of combined cycle gas turbines", IEEE Bologna power Tech conference.

[7] Lalor,G.,Ritchie,j.,Flynn,D.,o'Malley,M.J.,2005,"The Impact of CCGT Short-Term Dynamics on Frequency Control" ,IEEE Transactions on Power Systems, vol. 20, No.3 , pp. 1456 -1464.

[8] Rowen,W.I.,1983,"Simplified Mathematical Representation of Heavy duty Gas Turbine",Trans.Amer.soc.Mech.Eng.,vol.105 ,pp.865-869.

[9] Spalding,D.B.,cole,E.H.,973,"EngineeringThermodynamics",Edward Arnold(publishers),London.

[10] Utkin,v.,Guldner,J.,Shi,J.,1999,"sliding mode control in electromechanical systems", Taylor & Francis, London.

[11] Vournas,C.D.,Potamianakis,E.G.,Moors,C.,Van Cutsem,T., 2004,"An educational Simulation tool for Power System control and stability", IEEE Transactions on Power Systems,Vol.19,pp.48-55.

[12] Zhang,Q.,so,P.L.,2000,"Dynamic Modeling of a combined cycle plant for power system stability studies", IEEE Power Engineering Society Winter Meeting,vol.2,pp,1538-1543.

[13] "Large-scale blackout in Malaysia", in Kaigai Denryoku (Foreign Power): Japan Electric Power Information center,Inc.,1996,pp.103-104.

[14] T.Inoue,y.sudo,A.Takeuchi,Y.Mitani and Y.Nakachi. "Development of a combined cycle plant model for power system dynamic simulation study", Trans. Inst. Elect.Eng.Jpn.,vol.119-B,no.7,pp.788-797,1999.

[15] S.Suzaki,K.Kawata,M.Seckoguchi and M.Goto, "Combined cycle Plant Model For Power System Dynamic Simulation Study,"Trans.Inst. Elect. Eng. Jpn., vol. 120-B, no.8/9 , pp. 1146 -1152,2000.

[16] K.Kunitomi,A.Kurita,H.Okamoto,Y.Tada,S.Ihara,P.Pourbeik,W.W.Price,A.B.Leirburukt,and J.J.Sanchez-Gasca, "Modeling independency of Gas Turbine Output," Proc.IEEE/Power Eng.Soc.Winter Meeting, Jan.2001.

[17] F.P.de Mello and D.J.Ahner, "Dynamic models for combined cycle plants in power system studies," IEEE Trans. Power syst.,vol.8,pp.152-158,Feb.1992.

[18] L.N.Hannet and A.khan, "Combustion turbine dynamic model valication fromtests," IEE Trans.power syst.,.vol.8pp.152-158, feb, 1992.

[19] C.Concordia and S.Ihara, "Load represenyation in power system stability studies," IEEE trans. Power Apparat. syst., vol.Pas-101, PP.969-977,Apr.1982.

[20] W.I.Rowen and R.L.Van Housten, "Gas turbine airflow control for optimum heat recovery," Trans. Amer. soc. Mech. Eng. Power, Vol. 105 , pp.7279,Jan.1983.

[21] C.Concordia and has S.Ihara ,N.Simons,and W.Waldron, "load behavior observed in LILCO and RG&E systems," IEEE trans. Power Apparat. syst., vol.Pas-101,PP.969-977,Apr.1982.

[23] Lu C-F.Liu C-C, Wu C. Effect of Bettery energy storage system on load frequency control considering dead band and generation rate constraints. IEEE Trans Power Syst 1995;10(3):555-61.

[24] Mitani Y,Tisuji K,Murakami Y. Application of Super conductiong magnetic energy storage to improve power system dynamic performance. IEEE Trans Power Syst 1988;PWRS-3(4):1418-25.

[25] Tripathy SC, Balsubramania R,Chanramohanan Nair PS.Effect of Superconducting Magnetic Energy Storage on AGC considering governor dedand and biler dynamics. IEEE Trans power Syst 1992; PWRS 3(7):1266-73.

[26] Demiroren.A, Yesil.E, Automatic Generation Control with Fuzzy Logic Controllers in the Power System Including SMES Unit.

[27] T.Ise and Y.Murakami, "Simultaneous active and reactive power control of SMES using GTO converter", IEEE Trans on Power Delivery, Vol. PWRD – I, No.1,pp. 143-150, January 1986.

[28] S. Banerjee, J. K. Chatterjee and S. C. Tripathy, "Application of magnetic energy storage unit as Continuous VAR controller", IEEE Trans. on Energy Conversion, Vol. 5, No. 1, pp. 46-51, March 1990.

[29] C.J.Wu and Y.S.Lee,"Application of super conducting magnetic energy storage unit to improve the damping of synchronous generator", IEEE Trans Energy Conversion, Vol. 6, No. 4, pp. 573-578, December 1991.

[30] L.A.Zdeh, "Fuzzy Sets", Inform.contr.Vol.8. pp. 338 – 353, 1965.

J.Raja born on 1980 and received his B.E.degree (Electrical and Electronics) and M.E. degree (Power System) in the year 2001 & 2003 respectively ,He is currently pursuing his Ph.D degree in Pondicherry University ,Puducherry, India. He published technical papers in International & National Journals and Conferences. He is currently working as Assistant Professor in the Electrical & Electronics Engineering Department at Sri Manakula Vinayagar Engineering College, Affiliated to Pondicherry University, Pondicherry, India. His area of interest is power system Controls and Stability, operational planning and control. He acquired Member in ISTE in India.

Dr. C.Christober Asir Rajan born on 1970 and received his B.E. (Distn.) degree (Electrical and Electronics) and M.E. (Distn.) degree (Power System) from the Madurai Kamaraj University (1991 & 1996), Madurai, India. And he received his postgraduate degree in DI.S. (Distn.) from the Annamalai University, Chidambaram He received his Ph.D degree in Power System from the College of Engineering, Guindy, Anna University, Chennai, India (2001-2004). He published technical papers in International & National Journals. He is currently working as Associate Professor in the Electrical & Electronics Engineering Department at Pondicherry Engineering College, Pondicherry, India. His area of interest is power system optimization, operational planning and control. He is undertaking various R & D projects. He acquired Member in ISTE and MIE in India.

Mr.Y.Thiagarajan was born in Puducherry, India. He has obtained B.E (Electrical and Electronics) and M.E (Power Electronics and Drives) in 2006 and 2008 respectively from Annamalai University and Mailam Engineering College, Mailam. He is currently working has Lecturer in Sri Manakula Vinayagar engineering college, Pondicherry. His areas of interest are control strategies for power electronic converters He has published papers in national, international conferences in the field of power electronics.

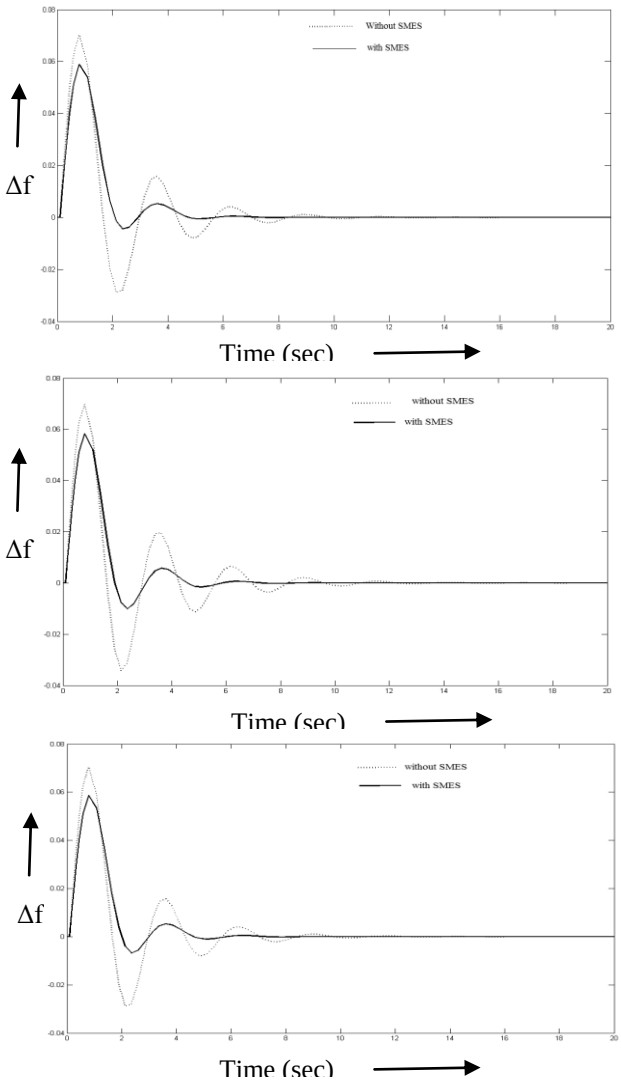

Figure 8 Comparative Performance of Closed loop CCGT response with / without SMES – Different Load Levels

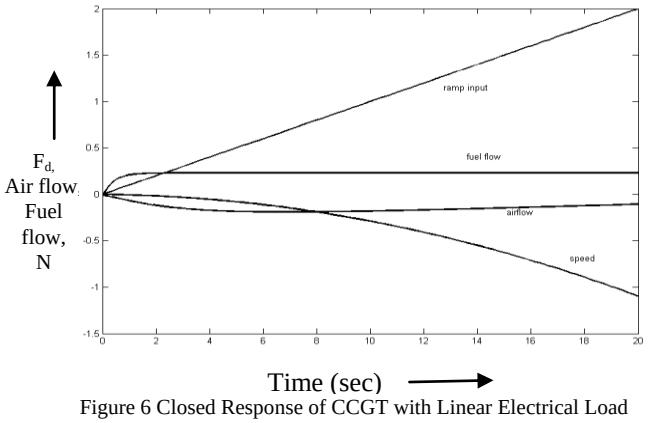

Figure 6 Closed Response of CCGT with Linear Electrical Load

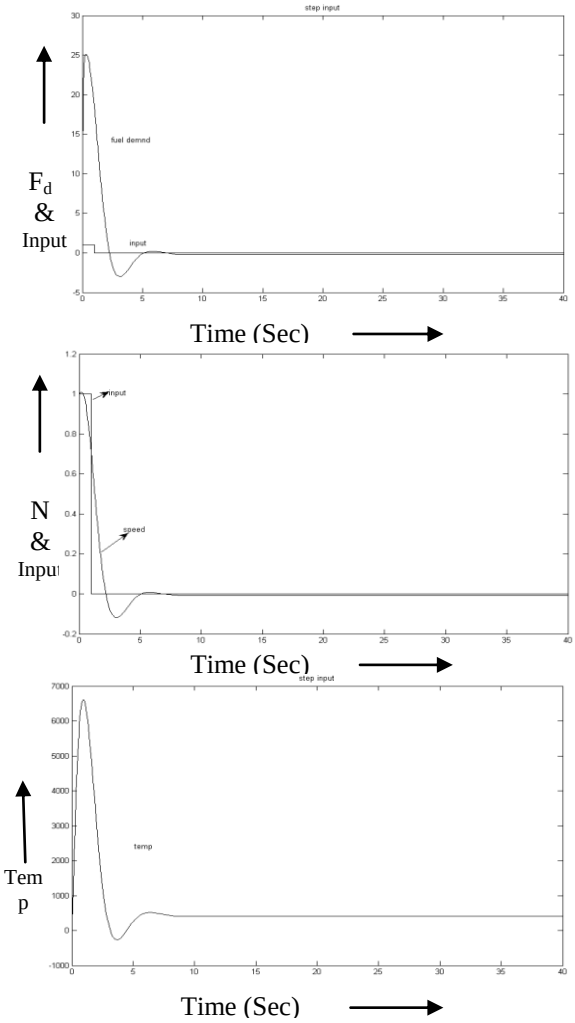

Figure 7 Closed loop response of CCGT with Speed & Temp Control Loop is Active