International Journal of Computer and Electrical Engineering, Vol. 2, No. 5, October, 2010
1793-8163

Voltage Sag Mitigation Using Dynamic Voltage Restorer System

[1.]S.Deepa and [2.]Dr.S.Rajapandian

***Abstract*—This paper presents the application of dynamic voltage restorer (DVR) on Power distribution systems for mitigation of voltage sags at critical loads. DVR is one of the compensating types of custom power devices. The impedance source inverter employs a unique impedance network couple with inverter main circuit and rectifier. By controlling the shoot through duty cycle, the Z source inverter system using MOSFET provide ride through capability during voltage sags, reduces line harmonics and improves power factor. Simulation results are presented to illustrate and understand the performances of DVR with 8-bus system in supporting load voltages under voltage sags conditions.**

***Index Terms*—Power quality, voltage sags, DVR, Impedance source inverter (ZSC).**

I. INTRODUCTION

Modem power systems are complex networks, where hundreds of generating stations and thousands of load centers are interconnected through long power transmission and distribution networks [1]. The main concern of consumers is the quality and reliability of power supplies at various load centers where they are located. Even though the power generation in most well developed countries is fairly reliable, the quality of the supply is not so reliable. Power distribution systems, ideally, should provide their customers with an uninterrupted flow of energy at smooth sinusoidal voltage at the contracted magnitude level and frequency [2] However, in practice, power systems, especially the distribution systems, have numerous nonlinear loads, which significantly affect the quality of power supplies. As a result of the nonlinear loads, the purity of the waveform of supplies is lost. This ends up producing many power quality problems. Apart from nonlinear loads, some system events, both usual (e.g. capacitor switching, motor starling) and unusual (e.g. faults) could also inflict power quality problems [3]. The consequence of power quality problems could range from a simple nuisance flicker in the electrical lamps to loss of thousands of dollars due to production shutdown.

A power quality problem is defined as any manifested problem in voltage/current or leading to frequency deviations that result in failure or misoperation of customer equipment voltage sag is defined as a sudden reduction of supply voltage down 90% to 10% of nominal followed by a recovery after a short period of time. A typical duration of sag is, according to the standard, l0 ms to 1 minute.[3] Voltage sag can cause loss of production in automated process since voltage sag can trip a motor or cause its controller to malfunction. To compensate the voltage sag in a power distribution system, appropriate devices need to be installed at suitable locations [4]. These devices are typically placed at the point of common coupling [PCC] which is defined as the point of the network changes. The DVR is one of the custom power devices which can improve power quality, especially, voltage sags [5]. As there are more and more concerns for the quality of supply as a result of more sensitive loads in the system conditions, a better understanding of the devices for mitigating power quality problems is important.[6] This would allow us to make use of the functions of such devices in a better way with efficient control techniques[7]. Comparison of traditional and Z source inverters for fuel cell vehicles is given by shen[8]. The concept of Z source inverter is given by peng [9]. The above literature does not deal with the simulation of eight-bus system using DVR. This paper deals with modeling and simulation of 8 bus system using DVR.

II. IMPEDANCE SOURCE INVERTER

The traditional inverters are Voltage source inverter (VSI) which consists of a diode rectifier front end, dc link and inverter bridge. In order to improve power factor, either an ac inductor or dc inductor is normally used. The dc link voltage is roughly equal to 1.35 times the line voltage, and the V-source inverter is a buck converter that can only produce an ac voltage limited by the dc link voltage. Because of this nature, the V-source inverter based PWM, VSI are characterized by relatively low efficiency because of switching losses and considerable EMI generation. Since switches are used in the main circuit, each is traditionally composed of power transistors and anti parallel diode. It provides bi-directional current flow and unidirectional voltage blocking capability. Thus inverter presents negligible switching losses and EMI generation at the line frequency.

The newly proposed Z-source inverter has the unique feature that it can boost/buck the output voltage by introducing shoot through operation mode, which is forbidden in traditional voltage source inverters. With this unique feature, the Z-source inverter provides a cheaper, simpler, buck-boost inversion by single power conversion stage, strong EMI immunity and low harmonic distortion. Moreover, it highly enhances the reliability of the inverter because the shoot through can no longer destroy the inverter. This paper provides analysis and comparisons of the impedance source inverter and voltage source inverter for DVR.

[1.]Research Scholar [2.]Professor/EEE Dept
[1.]Sathyabama University [2.]Panimalar Engineering College Chennai, India.
Email: [1.]dee_soms123@yahoo.co.in

A. Analysis of impedance network

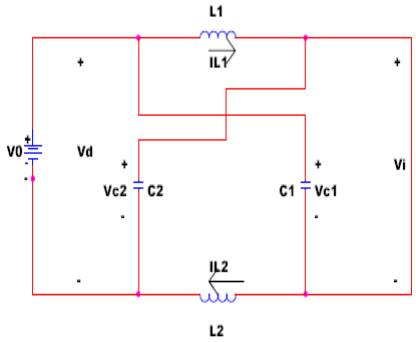

Fig. 1 Equivalent circuit of the impedance network

Assume the inductors (L1&L2) and capacitors (C1& C2) have the same inductance and capacitance valuesrespectively.

From the above equivalent circuit

$$Vc_1 = Vc_2 = Vc \quad (1)$$

$$V_{L1}=V_{L2}=V_L \quad (2)$$

$$V_L= V_C\ ,\ V_d = 2V_C$$

$$Vi=0;$$

During the switching cycle T

$$V_L=Vo-Vc \quad (3)$$

$$V_d = Vo$$

$$Vi= Vc -V_L\ Vc- (Vo-Vc)$$

$$Vi= 2Vc -Vo \quad (4)$$

Where, Vo is the dc source voltage and

$$T=To +T_1 \quad (5)$$

The average voltage of the inductors over one switching period (T) should be zero in steady state

$$V_L = V_L = To\ .Vc +T_1(Vo-Vc)/T = 0$$

$$V_L = (To\ .Vc +Vo.T_1- Vc.T_1)/T=0$$

$$V_L=(To-Tc)Vc/T +(T_1.Vo)/T$$

$$Vc/Vo=T_1/T_1-T_0 \quad (6)$$

Similarly the average dc link voltage across the inverter bridge can be found as follows.

From equation 4:

$$Vi=Vi = (To\ .0+T_1.(2Vc-Vo))/T \quad (7)$$

$$Vi = (2Vc.\ T_1/T)-(T_1Vo/T)$$

$$2Vc=Vo$$

From equation 6

$$T_1.Vo/(T_1-To)=2Vc.T_1/(T_1-To)$$

$$Vc=Vo.T_1/(T_1-To)$$

The peak dc-link voltage across the inverter bridge is

$$Vi=Vc-V_l=2Vc-Vo$$

$$=T/(T_1-To).Vo=B.Vo$$

Where $B=T/(T_1-To)$i.e ≥ 1

B is a boost factor

The output peak phase voltage from the inverter

$$Vac=M.vi/2 \quad (9)$$

Where M is the modulation index

In this source $Vac=M.B.Vo/2$ (10)

In the traditional sources

$$Vac = M.Vo/2$$

For Z-Source

$$Vac = M.B.Vo/2$$

The output voltage can be stepped up and down by choosing an appropriate buck - boost factor BB

$$BB= B.M \text{ (it varies from 0 to } \alpha) \quad (11)$$

The capacitor voltage can be expressed as

$$Vc1=Vc2=Vc= (1-To/T).Vo/(1-2To/T)$$

The boost factor BB is determined by the modulation index m and the boost factor B. The boost factor B can be controlled by duty cycle of the shootthrough zero state over the non-shoot through states of the PWM inverter. The shoot through zero state does not affect PWM control of the inverter. Because it equivalently produce the same zero voltage to the load terminal. The available shoot through period is limited by the zero state periods that is determined by the modulation index.

III. Dynamic Voltage Restorers

A DVR is a device that injects a dynamically controlled voltage Vinj(t) in series to the bus voltage by means of a booster transformer as depicted in Figure1. The amplitudes of the injected phase voltages are controlled such as to eliminate any detrimental effects of a bus fault to the load voltage VL(t). This means that any differential voltage caused by transient disturbances in the AC feeder will be compensated by an equivalent voltage generated by the converter and injected on the medium voltage level through the booster transformer.

The DVR works independent of the type of fault or any event that happens in the system, provided that the whole system remains connected to the supply grid, i.e. the line breaker does not trip. For most practical cases, a more economical design can be achieved by only compensating the positive- and negative sequence components of the voltage disturbance seen at the input of the DVR. This option is reasonable because for a typical distribution bus configuration, the zero sequence part of a disturbance will not pass through the step down transformers because of infinite impedance for this component. For most of the time the DVR has, virtually, "nothing to do," except monitoring the bus voltage. This means it does not inject any voltage (Vinj(t)= 0) independent of the load current. Therefore, it is suggested to particularly focus on the losses of a DVR during normal operation. Two specific features addressing this loss issue have been implemented in its design, which are a transformer design with low impedance, and the semiconductor devices used for switching. An equivalent circuit diagram of the DVR and the principle of series injection for sag compensation is depicted in Figure 2.

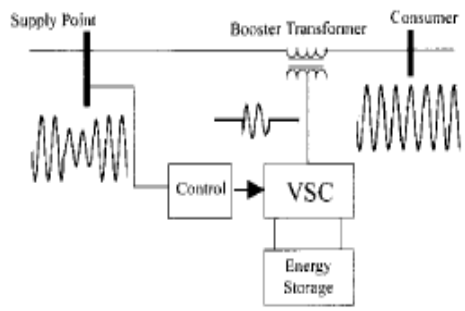

Fig. 2 Schematic diagram of DVR System

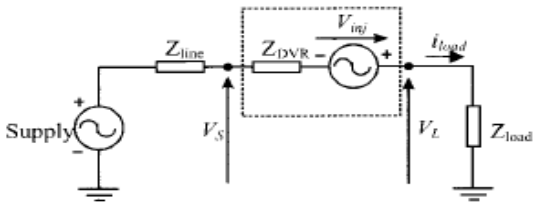

Fig. 3 Equivalent circuit of DVR

Mathematically expressed, the injection Satisfies

$$V_L(t)=V_s(t)+V_{inj}(t)$$

Where VL(t) is the load voltage, Vs(t) is the sagged supply voltage and Vinj(t) is the voltage injected by the mitigation device as shown in Fig. 2.

Under nominal voltage conditions, the load power on each phase is given by

$$S_L=I_L V_L^* =P_L-j\,Q_L$$

Where I is the load current, and, PL and QL are the active and reactive power taken by the load,respectively, during a sag. When the mitigation device is active and restores the voltage back to normal, the following applies to each phase:

$$S_L =P_L-j\,Q_L=(P_S-j\,Q_s) +(P_{inj}-jQ_{inj})$$

where the sag subscript refers to the sagged supply quantities. The inject subscript refers to quantities injected by the mitigation device.

The real and reactive power is given by

$$P_p=|V_p|\sum_{q=1}^{n}|V_q|\,(G_{pq}\,\mathrm{Cos}\delta_{pq} + B_{pq}\,\mathrm{Sin}\delta_{pq})$$

$$Q_p=|\,V_p|\sum_{q=1}^{n}|V_q|(G_{pq}\,\mathrm{Sin}\delta_{pq} - B_{pq}\,\mathrm{Cos}\delta_{pq})$$

IV. Modeling of DVR in MATLAB

This section will briefly highlight one way of modeling a DVR in MATLAB against balanced voltage sags based on published literature and show the result of mitigation obtained. There are typically four main components to model a DVR:

- Coupling transformer
- DC voltage source
- Multi-pulse bridge inverter
- Control system

A typical DVR built in MATLAB and installed into a simple power system to protect a sensitive load in a large distribution system is presented. The

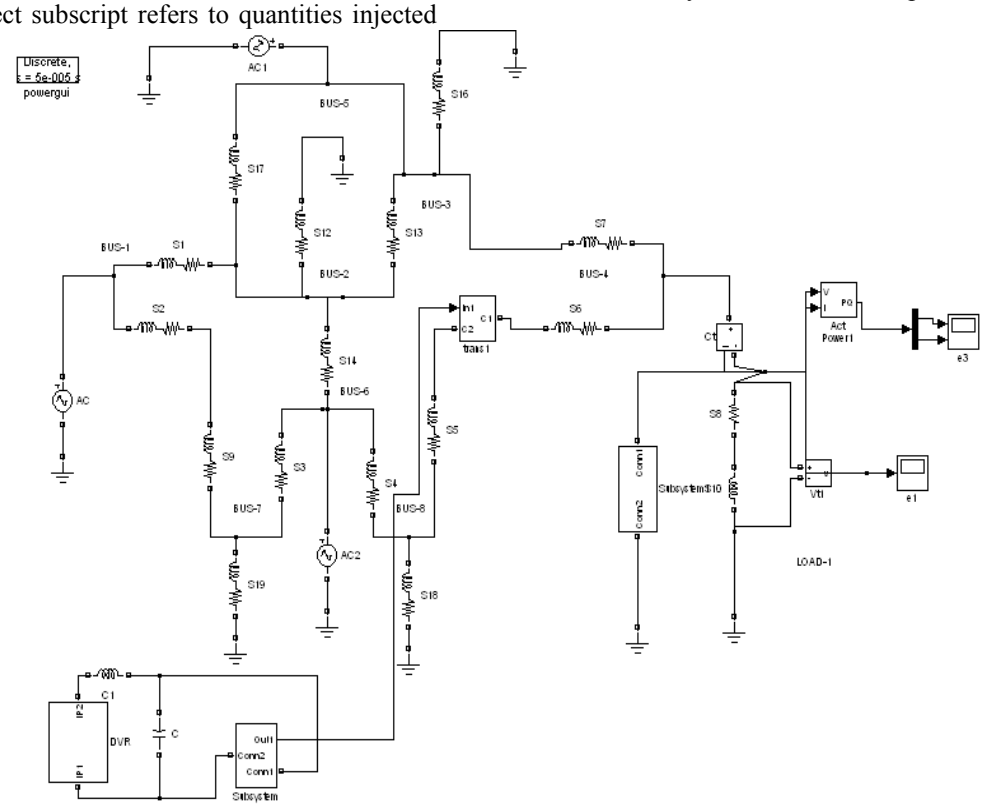

Fig. 4a Simulink model of 8 bus system with DVR

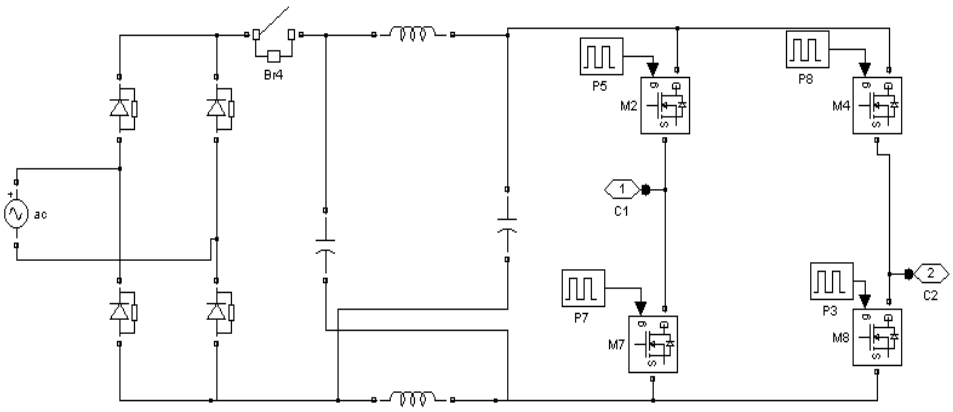

Fig. 4b DVR circuit

coupling transformer with either a delta or wye connection on the DVR side is installed on the line in front of the protected load. Filters can be installed at the coupling transformer to block high frequency harmonics caused by DC to-AC conversion to reduce distortion in the output [5]. The DC voltage source is an external source supplying DC voltage to the inverter to convert to AC voltage. The optimisation of the DC source can be determined during simulation with various scenarios of control schemes, DVR configurations, performance requirements, and voltage sags experienced at the point DVR is installed.

V. Simulation Results

In order to understand the performance of the DVR along with control, 8 bus system as shown in Figure(4) is implemented. Voltage sags are simulated by temporary connection of different impedances at the load side bus. A DVR is connected to the system through a series transformer with a capability to insert a maximum voltage of 50% of the phase to-ground system voltage..

The results are shown in Figure [5]. A 30% voltage sag is initiated at 200 ms and it is kept until 400 ms, with total voltage sag duration of 200ms.. Observe that during normal operation, the DVR is doing nothing. It quickly injects necessary voltage components to smooth the load voltage upon detecting a voltage sag. It is noted that voltage harmonics in mpedance source inverter is 17.92%

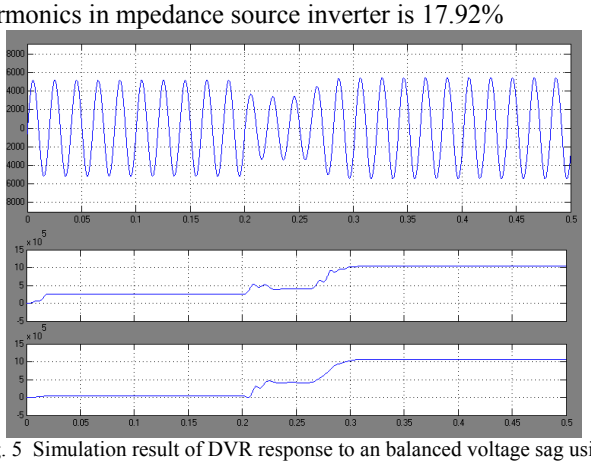

Fig. 5 Simulation result of DVR response to an balanced voltage sag using Z source inverter (a)Voltage across load-1 (b) Real & reactive power across load-1

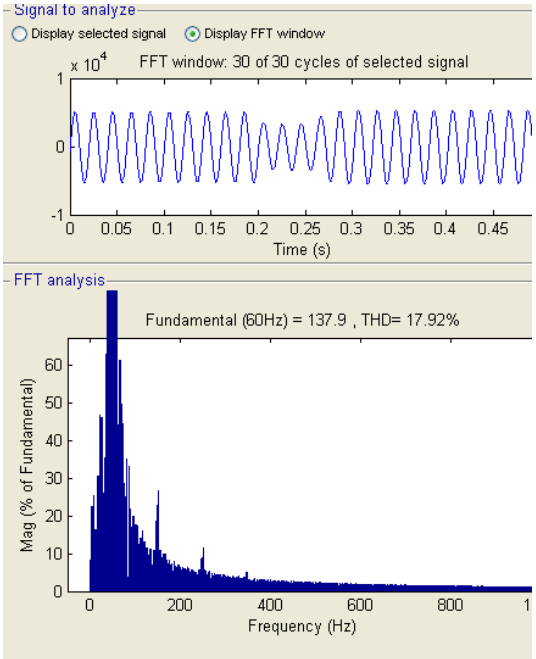

Fig. 6 Fast fourier Transformation Analysis(FFT) of DVR system using impedance source inverter

VI. Conclusion

This paper has presented a new DVR system based on the Z-source inverter. The operating principle and analysis have been given the harmonic contents. Simulation results verified the operational and demonstrated the promising features. In summary, the Z-source inverter DVR system has several unique advantages that are very desirable for many DVR applications,

* it can produce any desired output ac voltage, even greater than the line voltage
* Provides ride –through during voltage sags without any additional circuits and energy storage;
* reduces in-rush and harmonic current.
* unique features include buck-boost inversion by single power-conversion stage, improved reliability, strong EMI immunity, and low EMI
* the Impedance source technology can be applied to the entire spectrum of power conversion.
* The Simulation results are similar to the predicted results.

REFERENCES

[1] A. Ghosh and G. Ledwich, Power Quality enhancement Using Custom Power Devices, Kluwer Academic Publishers, 2002.
[2] S. Santoso, Electrical Power System Quality, Mcgraw-Hill, 2002.
[3] N.G. Hingorani, Introducing Custom Power, in IEEE Spectrum,32, pp. 4l-48, 1995.
[4] P. T. Nguyen and T. K. Saha (2004), "DVR against balanced and unbalanced Voltage sags: Modeling and simulation," IEEE-School of Information Technology and Electrical Engineering, University of Queesland, Australia, 2004.
[5] Yop Chung, Dong-Jun Won, Sang-Young Park, Seung-Il Moon andJong-Keun Park; "The DC link energy control method in dynamic voltage restorer system", International journal on Electric power and energy system, Volume 25, Issue 7, September 2003, Pages 525-531
[6] Paisan Boonchiam and Nadarajah Mithulananthan, "Understanding of Dynamic Voltage Restorers Through MATLAB Simulation" Thammasat Int. J. Sc. Tech., Vol.11, No. 3, July-September 2006.
[7] B. Justus Rabi and R. Arumugam," Harmonics Study and Comparison of Z-Source Inverter with Traditional Inverters", American Journal of Applied Sciences 2 (10): 1418-1426, 2005.
[8] Miaosen Shen, Alan Joseph, Jin Wang, Fang Z. Peng1, and Donald J. Adams2, " "comparison of Traditional Inverters and Z- Source Inverter for Fuel Cell Vehicles".
[9] F. Z. Peng, " Z-Source Inverter," in Proc. IEEE IAS'02,2002. pp.775 – 781.

S.Deepa has obtained her B.E degree from Periyar University in 2003. She has obtained her PG degree from Annamalai University in 2005. Presently she is doing her research at Sathyabama University. Her research interest is in the area of Power quality.

Dr.S.Rajapandian has obtained his B.E degree from madras university in 1966. He obtained his M.E degree and PhD from IISc, Bangalore in 1969 and 1974. Presently he is a Professor at Panimalar Engineering college, Chennai, India. His research interest is in areas of High voltage Engineering and power quality improvement.