International Journal of Computer and Electrical Engineering, Vol. 2, No. 4, August, 2010
1793-8163

Transient Stability Assessment of a Power System with a UPFC by Mixture of Experts

Reza Ebrahimpour, Easa Kazemi Abharian, Ali Akbar Motie Birjandi and Seyed Zeinolabedin Moussavi

***Abstract*— The power-transfer capability of long transmission lines is usually limited by large signal stability. Economic factors, such as the high cost of long lines and revenue from the delivery of additional power, give strong incentives to explore all economically and technically feasible means of raising the stability limit. The Flexible AC Transmission Systems (FACTS) devices could provide fast control of active and reactive power through a transmission line. We have tried to introduce a new model for transient stability prediction of a power system with a Unified Power Flow Controller (UPFC) to add a contribution to the subject. For this reason we applied so called, Committee Neural Networks (CNNs) methods as tools for Transient Stability Assessment (TSA) of power system. We use the "Mixture of Experts" (ME) in which, the problem space is divided into several subspaces for the experts, and then the outputs of experts are combined by a gating network to form the final output. In this paper, ME is used to assess the transient stability of power system with a UPFC after faults occur on transmission lines. Simulations were carried out on the IEEE 9-bus with and without a UPFC tests systems considering three phase faults on the systems. The data collected from the time domain simulations are then used as inputs to the ME in which is used as a classifier to determine whether the power systems are stable or unstable.**

***Index Terms*— Transient stability assessment , Mixture of the Experts, Time domain simulation method , flexible AC transmission systems and Unified Power Flow Controller.**

I. Introduction

Recent blackouts in different countries have illustrated the very importance and vital need of more frequent and thorough power system stability.

The size of the system makes control an extremely difficult task and open-access legislation and deregulation have added uncertainty to the provision of sufficient transmission capacity for new generating sources. Power-trading activities have resulted in increased, rapidly changing power flows. Under such conditions, Flexible AC Transmission Systems (FACTS) devices might have an important role, not only in increasing the amount of energy transported over the lines, but also in oscillatory- and transient-stability enhancement, system reliability, and controllability over the power flow.

Azbe et al. in [1] uses apply direct methods or other energy-function-based calculations in power systems, which include FACTS devices, the influence of those devices should be properly considered. They present an enhancement of the transient stability of power systems using the most versatile FACTS device, i.e., the Unified Power Flow Controller (UPFC). One of the most important tasks in transient-stability assessment is the determination of the Critical Clearing Time (CCT).With a digital simulation repetition this can be a very time-consuming task, useful only for the purposes of power-system planning. On the other hand, with the increased importance of online dynamic security assessment, solutions can be searched for using the Lyapunov direct method, thereby avoiding the need to solve the system's nonlinear differential equations.

This method is considered most accurate but is time consuming and need heavy computational effort. Presently, the use of Artificial Neural Network (ANN) in TSA has gained a lot of interest among researchers due to its ability to do parallel data Processing, high accuracy and fast response [2].

In this paper we use ANN for transient stability assessment of UPFC added power system.

The initiative work [3] we use stacked generalization model that it is trainable static combiners in Committee Neural Networks (CNNs). In this paper, we return our keen focus to dynamic combiners by the employment of ME. The result is a powerful and reliable method for transient stability assessment of power systems.

The actions of transient stability assessment using ME are explained and the performance of the ME is more efficient comparing with the stacked generalization model and the Multi Layer Perceptrons (MLPs) Neural Networks.

II. Transmission Characteristics of The UPFC

For readers' convenience, we will describe briefly the basic UPFC features relevant to our derivations. A more detailed description can be found in, e.g., [5 and 6]. In a lossless

system, a UPFC can be represented by a series-connected reactive voltage source with an accompanied transformer reactance X_{TRS} and a shunt-connected current source. The basic model of a device placed in a system between buses : and $_j$ phasor diagram is presented in Fig. 1(a) and (b).

Manuscript received December 20, 2009.

The Authors are with the Shahid Rajaee Teacher Training University, Department of Electrical and Computer Engineering, Lavizan, 16788, Tehran, Iran. Tel/Fax: +98 (21) 22970006; Emails: rebrahimpour@srttu.edu,e63kazemi@gmail.com,{motiebirjandi Smoussavi}@srttu.edu

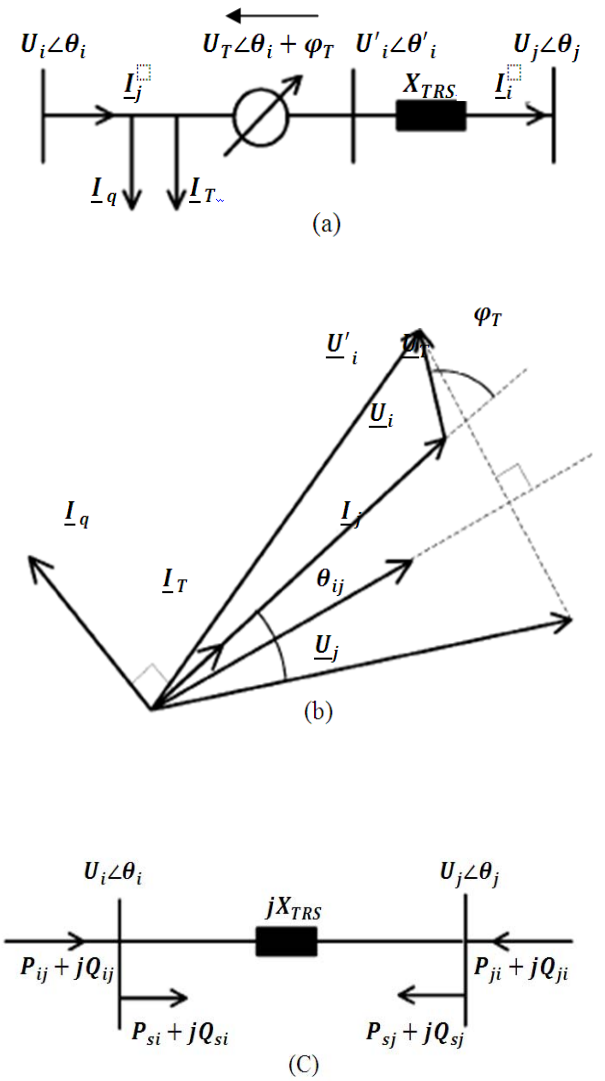

Fig. 1- (a) Basic model of the UPFC. (b) Phasor diagram. (c) UPFC injection model.

Current $\underline{I_T}$ is in phase with $\underline{U_i}$ and represents the active power exchange between the parallel and series UPFC branches. This power is equal to the active power injection of the series branch. The current $\underline{I_q}$ represents the reactive parallel branch current that is independent of the voltage magnitude U_i for the largest part of the operating area. The controllable parameters are U_T , φ_T and I_q , whereas I_T depends on the active power injected in the series branch.

U_T represents the magnitude of the injected voltage $\underline{U_T}$, while φ_T represents the angle of the injected voltage $\underline{U_T}$ according to the bus voltage $\underline{U_i}$.

The injection model for the series branch of a UPFC is presented in [7].We now reproduce these equations and add the shunt-connected current source to obtain a complete UPFC injection model

$$P_{si}=\frac{U_iU_T}{X_{TRS}}\sin(\varphi_T)+U_i.I_T \tag{1}$$

$$P_{sj}=-\frac{U_iU_T}{X_{TRS}}\sin(\theta_{ij}+\varphi_T) \tag{2}$$

$$Q_{si}=\frac{U_iU_T}{X_{TRS}}\cos(\varphi_T)+U_i.I_q \tag{3}$$

$$Q_{sj}=-\frac{U_iU_T}{X_{TRS}}\sin(\theta_{ij}+\varphi_T) \tag{4}$$

Where $\theta_{ij}=\theta_i-\theta_j$ according to Fig. 1.

This active power is equal to the real part of the scalar product of the series-injected voltage $\underline{U_T}$ and the conjugated value of the current $\underline{I_j}$

$$U_i.I_T=\mathrm{Re}[U_T.I_j^*] \tag{5}$$

The current $\underline{I_j}$ can be assigned as

$$\underline{I_j}=\left(\frac{\underline{U_i'}-\underline{U_j}}{jX_{TRS}}\right) \tag{6}$$

Expressing the magnitude and the argument of the voltage $\underline{U_i'}$ as

$$\left|\underline{U_i'}\right|=\sqrt{U_i+U_T.\cos(\varphi_T)^2+U_T.\cos(\varphi_T)^2}$$

$$\arg(\underline{U_i'})=\theta_i+\arctan\left(\frac{U_T\sin(\varphi_T)}{U_i+U_T\sin(\varphi_T)}\right) \tag{8}$$

After a few algebraic calculations, we can rewrite the active power as

$$\underline{U_i}.\underline{I_T}=\frac{U_jU_T}{X_{TRS}}\sin(\theta_{ij}+\varphi_T)-\frac{U_iU_T}{X_{TRS}}\sin(\varphi_T) \tag{9}$$

and consequently express the real power injection as

$$P_{si}=\frac{U_iU_T}{X_{TRS}}\sin(\varphi_T)=-P_{si} \tag{10}$$

The above equations describe an analytical method for confirming the real power balance of a UPFC ($P_{si}=-P_{sj}$).

The injection model formally corresponds to the model derived in [8], where the magnitude of the series-injected voltage U_T is denoted as $r.U_i$ .This is correct in the case of a phase shifting transformer, where its series-injected voltage magnitude is in proportion to the bus voltage magnitude U_i , and, consequently, the controlled parameter is r In the case of a UPFC such a formulation is not appropriate, because the magnitude of the series-injected voltage U_T does not depend on the magnitude of the bus voltage U_i and , consequently, the controlled parameter cannot be r but the magnitude itself U_T .

III. Mathematical Model Of Multi-Machine Power System

The differential equations to be solved in power system stability analysis using the time domain simulation method are the nonlinear ordinary equations with known initial

$$M_i \frac{d^2\delta_i}{dt^2} = P_{mi} - P_{ei}$$

values. Using the classical model of machines, the dynamic behavior of an n-generator power system can be described by the following equations:

(11)

It is known that,

$$\frac{d\delta_i}{dt} = \omega_i \quad (12)$$

By substituting (2) in (1), therefore (1) becomes

$$M_i \frac{d\omega_i}{dt} = P_{mi} - P_{ei} \quad (13)$$

Where:

. $\delta_i =$ rotor angle of machine i rotor

. $\omega_i =$ rotor speed of machine i

. $P_{mi} =$ mechanical power of machine i

. $P_{ei} =$ electrical power of machine i

. $M_i =$ moment of inertia of machine i

A time domain simulation program can solve these equations through step-by- step integration by producing time response of all state variables.

IV. Mixture of Experts

Mixture of experts is the most famous method in the category of dynamic structures of classifier combining, in which the input signal is directly involved in actuating the mechanism that integrates the outputs of the individual experts into an overall output [9 and 10]. The combination of experts is said to constitute a committee machine**.** Basically, it fuses knowledge acquired by experts to arrive at an overall decision that is supposedly superior to that attainable by any one of them acting alone. Committee machines are universal approximations. They may be classified into two major categories:

1. Static structures. In this class of committee machines, the responses of several predictors (experts) are combined by means of a mechanism that does not involve the input signal, hence the designation "static."This category includes the following methods:

Ensemble averaging**,** where the outputs of different predictors are linearly combined to produce an overall output. Boosting, where a weak learning algorithm is converted into one that achieves arbitrarily high accuracy.

2. Dynamic structures. In this second class of committee machines, the input signal is directly involved in actuating the mechanism that integrates the outputs of the individual experts into an overall output, hence the designation "dynamic." Here we mention two kinds of dynamic structures:

- Mixture of experts, in which the individual responses of the experts are nonlinearly combined by means of a single gating network.
- Hierarchical mixture of experts, in which the individual responses of the experts are nonlinearly combined by means of several gating networks arranged in a hierarchical fashion [13].

In this paper we used mixture of experts by a single gating network that shows in fig 2.

The first model's network architecture is the well-known "mixture of experts" (ME) network. The ME network contains a population of simple linear classifiers (the "experts") whose outputs are mixed by a "gating" network [11].

In a revised version of "mixture of experts" model, to improve the performance of the expert networks, we use MLPs instead of linear networks or experts in Fig.1. The application of MLPs in the structure of expert networks calls for a revision in the learning algorithm. In order to match the gating and expert networks, the learning algorithm is corrected by using an estimation of the posterior probability of the generation of the desired output by each expert. Using this new learning method, the MLP expert networks' weights are updated on the basis of those estimations and this procedure is repeated for the training data set. It should be mentioned that we do not use the notation of [9 and 12] to formulize the learning rules of the modified ME, but we follow the one which is described of [11 and 12], since it's clear explanation of learning rules makes its extension easier for our purpose (the learning algorithm of the mixture structure with linear classifiers as experts is described in [9 and 12]).

Each expert is an MLP network with one hidden layer that computes an output O_i as a function of the input stimuli vector, x, and a set of weights of hidden and output layers and a sigmoid activation function. We assume that each expert specializes in a different area of the input space. The gating network assigns a weight g_i to each of the experts' outputs, O_i.

Composed of two layers: the first layer is an MLP network, and the second layer is a soft max nonlinear operator. Thus, the gating network computers O_g, which is the output of the MLP layer of the gating network, then applies the soft max function to get:

$$g_i = \frac{\exp(O_{gi})}{\sum_{j=1}^{N} \exp(O_{ji})} \qquad i=1,2,3,\ldots,N \quad (14)$$

Where N is the number of expert networks. So the g_i is nonnegative and sum to 1. The final mixed output of the entire network is:

$$O_T = \sum_i O_i g_i \qquad i=1,2,3,\ldots,N \quad (15)$$

The weights of MLPs are learned using the error back-propagation, BP, algorithm. For each expert i and the gating network, the weights are updated according to the following equations:

$$\Delta w_y = \eta_g h_i (y - O_i)(O_i(1 - O_i))O_{hi}^T \quad (16)$$

$$\Delta w_h = \eta_e h_i w_y^T (y - O_i)(O_i(1 - O_i))O_{hi}(1 - O_{hi})x_i \quad (17)$$

$$\Delta w_{yg} = \eta_g (h - g)(O_g(1 - O_g))O_{hg}^T \quad (18)$$

$$\Delta w_{hg} = \eta_e w_{yg}^T (y - O_i)(O_g(1 - O_g))O_{hg}(1 - O_{hg})x_i \quad (19)$$

Where η_e and η_g are learning rates for the expert and the

gating networks, respectively. w_y and w_h are the weights of input to hidden and hidden to output layer, respectively, for experts w_{hg} and w_{yg} are the weights of input to hidden and hidden to output layer, respectively, for the gating etwork. O_{hg}^T and O_{hi}^T are the transpose of O_{hi} and O_{hg}, the outputs of the hidden layer of expert and gating networks, respectively. h_i is an estimate of the posterior probability that expert i can generate the desired output y:

$$h_i = \frac{g_i \exp(-\frac{1}{2}(y-O_i)^T(y-O_i))}{\sum_j g_j \exp(-\frac{1}{2}(y-O_i)^T(y-O_i))} \quad (20)$$

As pointed out by Dailey and Cottrell [9,11], in the network's learning process, ''the expert networks 'compete' for each input pattern, while the gate network rewards the winner of each competition with stronger error feedback signals. Thus, over time, the gate partitions the input space in response to the expert's performance''.

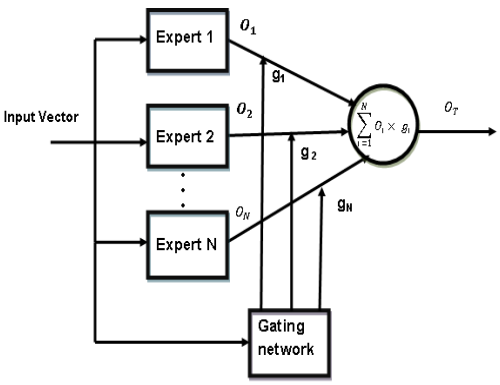

Fig. 2 - mixture of experts is composed of expert networks and a gating network. Each expert is a feed forward network and all experts receive the same input and have the same number of outputs. The gating network is also feed forward, and typically receives the same input as the expert networks.

In this paper, we use 3 experts that experts are MLPs which are 10 neurons in hidden layer and gating network is a MLP which is 4 neurons in hidden layer. Learning rate for gating network i $\eta_g = 0.01$ and learning rate for experts networks ar $\eta_e = 0.28$ and numbers of epoch for training are 100 epochs.

V. Methodology

The test system is an IEEE 9-bus machine system, for which data can be found in [3]. Such a model cannot serve for validation purposes because the system fault and the post-fault trajectory are no longer uniformly given, and direct methods do not give exactly the same results as the simulation. One UPFC was included in the system according to Fig. 4. This UPFC is rated at 100 MVA. They are bypassed and not active until a three-phase fault near bus 7 is eliminated. For validation and verification of the ME method in transient stability assessment we use the IEEE 9-bus with one UPFC included between buses 5 and 7. This test system present in Fig.3. Before the ME implementation, time domain simulations considering several contingencies were carried out for the purpose of gathering the training data sets. Simulations were done by using the MATLAB-based PSAT software [15].

Time domain simulation method is chosen to assess the transient stability of a power system because it is the more accurate method compared to the direct method. In PSAT, power flow is used to initialize the states variable before commencing time domain simulation. The differential equations to be solved in transient stability analysis are nonlinear ordinary equations with known initial values. To solve these equations, the techniques available in PSAT are the Euler and trapezoidal rule techniques. In this work, the trapezoidal technique is used considering the fact that it is widely used for solving electro-mechanical differential algebraic equations [14].

The type of contingency considered is the three-phase balanced faults created at various locations in the system at any one time. When a three-phase fault occurs at any line in the system, a breaker will operate and the respective line will be disconnected at the Fault Clearing Time (FCT) which is set by the user. The FCT is set randomly by considering whether the system is stable or unstable after a fault is cleared. According to [18], if the relative rotor angles with respect to the slack generator remain stable after a fault is cleared, it implies that FCT < CCT and the power system is said to be stable but if the relative angles go out of step after a fault is cleared, it means FCT>CCT and the system is unstable[5].

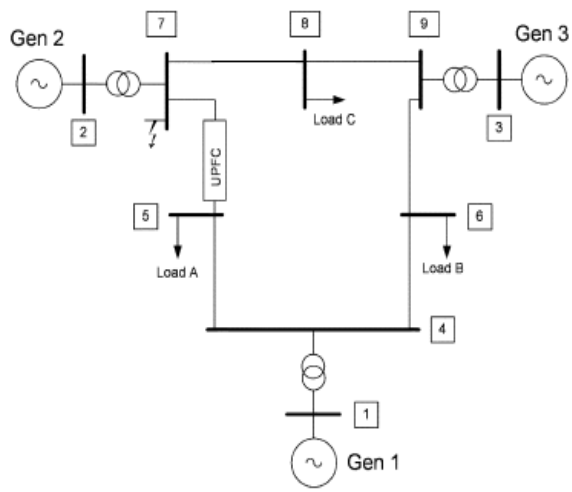

Fig. 3 - IEEE 9 bus System with a UPFC

TABLE 1: Input feature Selected for IEEE 9-Bus System

Name of input features	No. of features
Relative rotor angle $(\delta_i - 1)$	2
Generator speed (ω_i)	3
P_{gen} & Q_{gen}	6
P_{line} & Q_{line}	12
P_{trans} & Q_{trans}	6
Total number of feature	29

VI. Transient Stability Simulation On The Test System

The IEEE 9-bus system in which the data used for this work is obtained from [3, 14, and 15]. The system consists of three Type-2 synchronous generators with AVR Type-1, six transmission lines, three transformers and five loads.

By using data IEEE 9-bus system with one UPFC and applied data to PSAT software step time responses in Fig. 4 are resulted. By observing results stable and unstable cases come be clearly classified. A three phase fault is said to occur at time t=1 second on tree phase lines between bus 7 and 5. In Fig. 4(a), the FCT is set at 1.083 second while in Fig. 4(b) the FCT is set at 1.4 second. Fig. 4(a) shows that the stable relative rotor angles of the second and third generators oscillation compared to the first relative rotor angles generator. Figure 4(b) shows that the relative rotor angles of the generators that go out of step after a fault is cleared and inconsequence system is unstable.

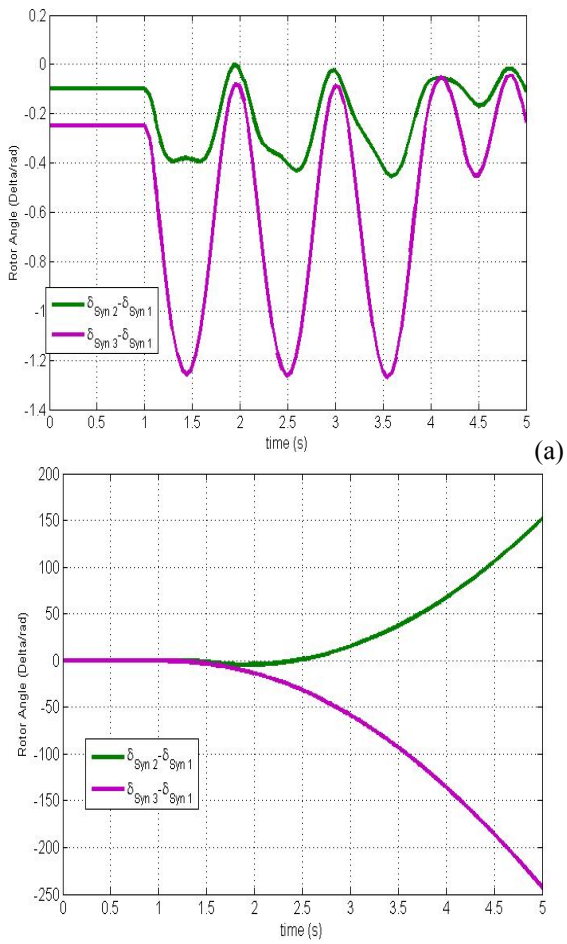

Fig. 4 - Relative rotor angle bents of generators for a) stable and b) unstable cases for the IEEE 9-bus system

VII. Data Preprocessing

A The simulation on the system for a fault at each line runs for five seconds at a time step Δt, set at 0.05 sec. The fault is set to occur at one second from the beginning of the simulation. Data for each contingency is recorded in which one steady state data is taken before the fault occurs and 20 sampled data taken for one second duration after the fault occurs. There are 30 contingencies simulated on the IEEE 9-bus system with one UPFC and this gives a size of 20×160 or 3200 data collected. There are 25 contingencies simulated on the IEEE 9-bus system and this gives a size of 20×25 or 500 data collected.

For IEEE 9-bus systems, the FCT of the same line are set at four different times, two for stable cases and two for unstable cases.

TABLE 2: Input Feature Selected for IEEE 9-Bus System with a UPFC

Name of input features	No. of features
Relative rotor angles $(\delta_i - 1)$	2
Generator speed (ω_i)	3
P_{gen} & Q_{gen}	6
P_{line} & Q_{line}	12
P_{trans} & Q_{trans}	6
controllable parameters of UPFC (U_i , φ_T and I_q)	3
Total number of feature	32

VIII. Input Features Selection In Power System

The selection of input features is an important factor to be considered in the ME implementation. The input features selected for this work are relative rotor angles $(\delta_i - 1)$, generator angle speed (ω_i), generated real and reactive powers (P_{gen} & Q_{gen}), real and reactive power flows on transmission line (P_{line} & Q_{line}),the transformer powers (P_{trans} & Q_{trans}) and the controllable parameters of UPFC (U_i , φ_T and I_q). Overall there are 32 input features to the ME for IEEE 9-bus systems without a UPFC shown in table 1 and with it shown in table 2. Out of the (500),without a UPFC,(3200),with a UPFC, data collected from simulations, a quarter of the data which are (125) and (800) data are randomly selected for testing and the remaining (375) and (2400) data are selected for training the neural networks.

IX. Performance Evaluation

In the proposed method, three experts and one gating network are used which we consider it as MLPs.

For MLPs evaluation we used : Learning rate for gating network is $\eta_g = 0.01$ and learning rate for experts networks are $\eta_e = 0.28$ and the number of iteration reaches 100. After training all the neural networks are trained with same input features which are parameters of transient stability assessment.

Performance of the developed ME can be gauged by calculating the error of the actual and desired test data. Firstly, error is defined as,

$$\text{Error}, E_n = \left|(\text{Desired output})_n - (\text{Actual output})_n\right| \quad (21)$$

Where, n is the test data number. The desired output is the known output data used for testing the neural networks. Meanwhile, the actual output is the output obtained from testing on the trained networks.

From equation (12), the percentage mean error, ME (%), can be obtained as:

$$\text{Percentage of Mean Error, Me(\%)} = \sum_{n=1}^{N} \frac{E_n}{N} \times 100 \qquad (22)$$

Where N is the total number of test data.

The percentage classification error, CE (%), is given by,

$$CE(\%) = \frac{\text{No of misclassfi ed of the test data}}{N} \times 100 \qquad (23)$$

We compare assessment methods in table 3where we showed zero mean error and zero percent miss classification in ME method for both IEEE 9-bus without a UPFC.

Table 3 show ME testing results using the 29 input features the total error of misclassification and the mean error is 0 (0%) but table 4 show misclassification and the mean error is (1.25%).The MLPs result for transient stability assessment according to table 3 with IEEE 9-bus system with one UPFC the total error of misclassification is 167 (21.11%), too, with IEEE 9-bus, total error of misclassification is 4 (3.42%)and the mean error (0.0253) and the CNN result for transient stability assessment according to table 4 with IEEE 9-bus system the total error of misclassification is 1 (0.85%) and the mean error (0.0085). The selection of input features is an important factor to be considered in the ME implementation.

TABLE 3: THE RESULT OF FOR IEEE 9-BUS SYSTEM

Model	Number of input features	Mean error	misclassification
MLP	29	0.0253	4 (3.42%)
CNN	29	0.0085	1(0.85%)
ME	29	0	0%

TABLE 4: THE RESULT OF FOR IEEE 9-BUS SYSTEM WITH UPFC

Model	Number of input features	Mean error	misclassification
MLP	32	21.11	167(21.11%)
CNN	32	15.26	122(15.26%)
ME	32	1.25	10(1.25%)

X. CONCLUSION

We should announce that ME proposed method in transient stability assessment for power systems with a UPFC has a very high reliability. The actions of transient stability assessment using ME are explained and the performance of the ME is compared with the CNN and the MLP so as to verify the effectiveness of the proposed methods.

REFERENCES

[1] Azeb, B. , Gabrijel,M., Povh, D. and Mihalic ,R. : "The Energy Function of a General Multimachine System with a Unified Power Flow Controller", *IEEE Trans. Power Syst*., 2005, 3,(20), pp. 1478–1485.

[2] Amjady , N. ,and Majedi ,S.F. "Transient Stability Prediction by a Hybrid Intelligent System", *IEEE Trans. Power Syst*, 2007, 3, (22), pp.1275-1283.

[3] Ebrahimpour, R., and Kazemi Abharian, E. "An Improved Method in Transient Stability Assessment of a Power System Using Committee Neural Networks", IJCSNS, 2009, 9, (1), pp.119-124.

[4] Kundur,P. ,*Power System Stability and Control* , In The EPRI Power System Engineering Series ,McGraw Hill,1994.

[5] Mihalic,R., ˇ Zunko, P., and Povh, D. "Improvement of transient stability using unified power flow controller", *IEEE Trans. Power Delivery* , Jan. 1996 11(1), pp. 485–492.

[6] Gyugyi, L. "A unified power flow control concept for flexible AC transmission systems" , i*n Proc. 5th Int. Conf. AC and DC Power Transmission,* Sep. 1991, pp. 19–26.

[7] Noroozian, M., Angquist, L., and Ingestrom, G. "Series compensation in Flexible AC Transmission Systems (FACTS)" , *London, U.K.: IEE*, 1999, pp. 199–242.

[8] M. Ghandhari, "Control Lyapunov Functions: A Control Strategy for Damping of Power Oscillations in Large Power Systems," Ph.D. dissertations, Royal Inst. of Technol., Stockholm, Sweden, 2000.

[9] Ebrahimpour, R., kabir, E., and Yuosefi, M.R. "Teacher-directed learning in view-independent face Recognition with mixture of experts using Single-view eigenspaces", *Journal of the Franklin Institute* 2008,345 ,pp. 87–101.

[10] Ebrahimpour, R., kabir, E., and Yuosefi , M.R. "Teacher-directed learning in view-independent face recognition with mixture of experts using overlapping eigenspaces", *Computer Vision and Image Understanding* ,2008,111, pp. 195–206.

[11] Dailey, M.N., and Cottrell, G.W. "Organization of face and object recognition in modular neural network models", *Neural Networks*, 1999, 12, pp. 1053–1073.

[12] Jacobs, R.A., Jordan, M.I., Nowlan, S.E., and Hinton, G.E., "Adaptive mixture of expert", *Neural Comput*, 1991, 3, pp.79–87.

[13] Haykin, S.,*Neural Networks: A Comprehensive Foundation*, Prentice-Hall, 2nd edition, 1999.

[14] Abdul Wahab,N.I, Azah ,M., and Aini, H., "An Improved Method in Transient Stability Assessment of a Power System Using Probabilistic Neural Network" ,*JAS R*,2007, 3,(11),p. 1267-1274

[15] Milano, F.: 'Documentation for Power System An a l y s is T o o l b o x (P S A T)', http://www.power.uwaterloo.ca/~fmilano/downloads.htm. accessed, 2008.